KRAMER

Catalog KM-KWC-1023A
Replaces KM-KWC-1022A

WC-SERIES

NEXT-GEN WC-SERIES™
1/2 TO 6 HP INDOOR WATER COOLED CONDENSING UNITS

c UL US

Compact and Efficient Water Cooled Units

Next-Gen WC-Series™Water Cooled Condensing Units capitalize on the Next-Gen Kompact's award-winning design success. This exciting product offering features greater serviceability, increased unit efficiency, and is compatible for use with low GWP refrigerants. The improvements start with mechanically formed pre-bent tubing for reduced leak potential, high efficiency water cooled coaxial condenser and heat exchange, base mounted shut off valves, a large electrical control panel with removable door and abundant room for standard components and system accessories along with color-coded and numbered point-to-point wiring that assist in easy service and unit maintenance.

Standard Features

- Hermetic or quiet and efficient Scroll compressor
- High efficiency water cooled coaxial condenser
- Base mounted shut-off valves
- Liquid line kit with filter/drier and sight glass with moisture indicator
- Suction and discharge service valves (as required)
- Compressor contactor or start kit (as required)
- Suction line piping (filter optional)
- Color-coded point-to-point wiring
- Large electrical panel with hinged/removable door
- Refrigerant receiver with isolation valve and pressure relief plug
- Adjustable high pressure (auto reset) and low pressure (auto reset) controls
- Electronic defrost timer with defrost contactor/relay on low temperature models (2 evaps. maximum)
- Electronic air defrost timer (Medium temperature models only)
- UL and cUL listed for indoor use

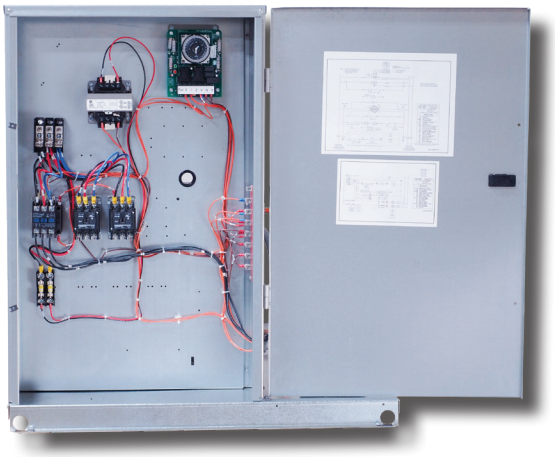

Easy access / removable control panel door
Color-coded wiring and diagrams for
easy maintenance

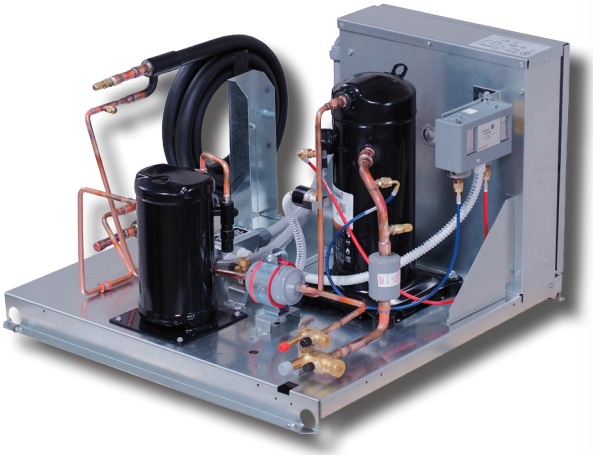

High efficiency water cooled coaxial
condenser and heat exchange

Options

- Suction accumulator
- Oil separator (may not be available with mounted accumulator)
- Thru-the-door fused disconnect for base sizes FW2 through FW4
- External fused or non-fused disconnect - loose
- Pump down toggle switch
- Replaceable core liquid filter
- Sealed suction filter
- Replaceable core suction filter
- Phase loss monitor
- Air or Electric Defrost provisions (requires optional control panel)
- Water regulating valve - loose
- Liquid line solenoid - loose
- Cupronickel heat exchanger and water piping
- Paragon mechanical timer in lieu of electronic timer
- Timer shipped loose in enclosure
- CPC timer
- 50 Hz timer and/or defrost kit
- Two-tier stacking rack

Features and Options

	DESCRIPTION	KWH	KWO
CABINET	Galvanized steel frame	STANDARD	
	316 stainless steel	OPTIONAL	
	Large control panel for power and control circuits	STANDARD	
	Hinged / removable control panel door	STANDARD	
COMPRESSOR	Hermetic	STD	N/A
	Scroll	N/A	STD
ELECTRICAL	Crankcase heater	OPTIONAL	
	Compressor contactor (1Ø or 3Ø), start kit (1Ø)	STANDARD	
	Control transformer (460V to 230V) as required	STANDARD	
	Adjustable high and low pressure controls	STANDARD	
	Color-coded wiring for maximum serviceability	STANDARD	
HIGH EFFICIENCY CONDENSER	High efficiency water cooled coaxial condenser	STANDARD	
	Cupronickel heat exchanger and water piping	OPTIONAL	
	Water regulating valve	OPTIONAL	
PIPING COMPONENTS	Base mounted liquid and suction shut-off valves	STANDARD	
	Suction line (piping only)	STANDARD	
	Suction kit (piping and sealed suction filter)	OPTIONAL	
	Suction line accumulator	OPTIONAL	
	Replaceable core liquid filter	OPTIONAL	
	Replaceable core suction filter	OPTIONAL	
	*Liquid line kit	STANDARD	
RECEIVER	Receiver isolation valve	STANDARD	
	Pressure relief plug	STANDARD	
	Pressure relief valve	OPTIONAL	
DEFROST PROVISIONS	^Electronic air defrost time clock for medium temps.	STANDARD	
	Mechanical defrost timer	OPTIONAL	
	50 HZ defrost timers with or without contactors	OPTIONAL	
	Electric defrost	(1)	(1)
TESTING	UL and C-UL listed	STANDARD	
	Hydrogen leak and dielectric tested before shipping	STANDARD	
	Dry nitrogen shipping charge (25 to 35 PSI)	STANDARD	

* Liquid line kit includes piping, filter drier, sight glass/moisture indicator.
1 Electric defrost kit is included on low temperature models and optional for medium temperature models - see electrical data pages 7.
^ Standard on extended medium temperature models only.

MODEL NUMBER NOMENCLATURE

K F O 500 E 4S E A L

K-Series Condensing Unit

Model Style
B = Non Flooded Model
F= Flooded Model

Compressor Type
H = Hermetic
O = Scroll

Horsepower

Temperature Range (varies by unit)
E = Extended Medium
M =Medium
L = Low

Refrigerant Type
44* = R404A 4S = Multiple refrigerants†
* Some models can be used with R22
† Multi-refrigerant designation for scroll compressor models only

Pre-assembly Code
Blank = Standard Configuration
T = Includes mechanical air defrost timer in lieu of electronic air defrost timer
L = Includes ED-kit with electronic timer in lieu of air defrost timer
LT = Includes ED-kit with mechanical timer in lieu of air defrost timer
NT = No defrost timer or defrost kit
See features page for configuration descriptions

Vintage

Voltage code
D = 208-230/1/60 **M** = 200-220/1/50
E = 208-230/3/60 **N** = 200-220/3/50
G = 460/3/60 **Q** = 380/3/50

Performance @ 105° F Condensing Temperature - Hermetic Models

EXTENDED MEDIUM TEMPERATURE

	MODEL NUMBER	CAPACITY DATA (BTUH) AT SUCTION TEMPERATURE												GPM REQ. FOR 85° F EWT^	
		30°F	25°F	20°F	15°F	10°F	0°F	-5°F	-10°F	-15°F	-20°F	-25°F	-30°F	GPM GAL/ MIN	WATER DP (PSI)
R404A	KWH055E4S**	6,450	5,750	5,110	4,520	3,980	3,010	2,560	2,150	1,745	1,355	979	–	1.9	1.2
	KWH080E4S**	8,180	7,310	6,490	5,740	5,040	3,810	3,280	2,820	2,410	2,060	1,770	–	2.3	1.7
	KWH090E4S**	10,200	9,160	8,190	7,280	6,430	4,900	4,220	3,580	3,000	2,470	1,985	–	3.0	1.2
	KWH100E4S**	10,650	9,570	8,550	7,590	6,690	5,080	4,360	3,690	3,080	2,530	2,040	–	2.9	1.1
	KWH125E4S**	13,900	12,600	11,350	10,100	8,970	6,870	5,920	5,060	4,280	3,600	3,010	–	3.9	1.8
R407C	KWH055E4S**	6,040	5,270	4,570	3,940	3,380	2,450	–	–	–	–	–	–	1.7	1.0
	KWH080E4S**	7,300	6,400	5,590	4,850	4,180	3,010	–	–	–	–	–	–	2.0	1.4
	KWH090E4S**	9,570	8,400	7,330	6,360	5,490	3,960	–	–	–	–	–	–	2.7	0.9
	KWH100E4S**	9,720	8,600	7,570	6,630	5,770	4,220	–	–	–	–	–	–	2.7	0.9
	KWH125E4S**	12,900	11,400	10,000	8,790	7,660	5,600	–	–	–	–	–	–	3.5	1.5
R448A, R449A	KWH055E4S**	6,350	5,550	4,810	4,160	3,570	2,580	2,170	1,805	–	–	–	–	1.8	1.1
	KWH080E4S**	8,030	7,010	6,080	5,240	4,480	3,230	2,750	2,360	–	–	–	–	2.2	1.6
	KWH090E4S**	10,050	8,850	7,730	6,710	5,780	4,200	3,560	3,020	–	–	–	–	2.9	1.1
	KWH100E4S**	9,680	8,670	7,720	6,830	5,990	4,480	3,800	3,170	–	–	–	–	2.7	0.9
	KWH125E4S**	12,700	11,450	10,250	9,100	8,030	6,060	5,170	4,350	–	–	–	–	3.6	1.6

* Each asterisk represents a variable character based upon voltage and vintage ordered. See page 3 for nomenclature.

^ GPM (gallons per minute) and pressure drop @ highest evap rating and 85° F entering water temperature (EWT).

DP = Differential pressure flow measurement (DP Flow)

Performance @ 105° F Condensing Temperature - Scroll Models - Ext. Medium Temp.

EXTENDED MEDIUM TEMPERATURE

	MODEL NUMBER	CAPACITY DATA (BTUH) AT SUCTION TEMPERATURE												GPM REQ. FOR 85° F EWT^	
		45°F	35°F	30°F	25°F	20°F	15°F	10°F	0°F	-10°F	-15°F	-20°F	-25°F	GPM GAL/MIN	WATER DP (PSI)
R404A	KWO060M4S**	11,250	9,120	8,170	7,280	6,470	5,720	5,040	3,880	2,990	–	–	–	2.7	1.1
	KWO080M4S**	14,100	11,200	9,980	8,860	7,860	6,950	6,130	4,700	3,470	–	–	–	3.4	1.6
	KWO100M4S**	16,350	12,850	11,400	10,100	9,000	8,010	7,120	5,580	4,180	–	–	–	3.8	2.0
	KWO130E4S**	17,350	14,550	13,000	11,650	10400	9,250	8,220	6,450	5,020	4,420	3,880	3,390	4.3	2.2
	KWO150E4S**	20,400	17,050	15,250	13,650	12200	10,850	9,640	7,560	5,890	5,180	4,540	3,970	5.0	3.0
	KWO180E4S**	23,600	19,800	17,750	15,850	14150	12,600	11,200	8,790	6,840	6,020	5,280	4,620	5.8	1.0
	KWO200E4S**	28,700	24,100	21,600	19,300	17200	15,300	13,600	10,700	8,330	7,330	6,430	5,630	7.0	1.5
	KWO250E4S**	32,200	26,900	24,200	21,600	19300	17,150	15,250	11,950	9,330	8,200	7,200	6,300	7.8	1.8
	KWO300E4S**	43,300	36,100	32,300	28,900	25800	23,000	20,400	16,050	12,500	11,000	9,650	8,450	10.5	2.8
	KWO350E4S**	47,500	39,800	35,600	31,900	28400	25,300	22,500	17,650	13,750	12,100	10,650	9,300	11.6	3.3
	KWO400E4S**	54,100	45,200	40,500	36,200	32300	28,800	25,600	20,100	15,650	13,750	12,100	10,600	13.1	1.8
	KWO450E4S**	60,400	50,500	45,200	40,400	36100	32,100	28,600	22,400	17,450	15,350	13,500	11,800	14.6	2.2
	KWO500E4S**	67,000	55,000	49,800	44,900	40300	36,200	32,400	25,800	20,400	18,000	15,900	14,000	17.5	3.0
	KWO600E4S**	81,500	67,000	60,500	54,500	48,800	43,800	39,200	31,300	24,800	22,000	19,500	17,200	20.8	4.1
R407A	KWO060M4S**	10,850	8,750	7,800	6,930	6,140	5,420	4,780	3,730	3,000	–	–	–	2.6	1.0
	KWO080M4S**	12,650	10,450	9,440	8,480	7,580	6,730	5,940	4,510	3,290	–	–	–	3.2	1.4
	KWO100M4S**	14,150	11,950	10,900	9,910	8,950	8,020	7,120	5,440	3,870	–	–	–	3.7	1.8
	KWO130E4S**	16,600	13,450	12,050	10,850	9,720	8,710	7,810	6,220	4,860	4,220	3,610	–	4.1	2.1
	KWO150E4S**	19,800	16,050	14,400	12,950	11,600	10,400	9,320	7,430	5,800	5,050	4,320	–	4.9	2.9
	KWO180E4S**	22,600	18,300	16,450	14,750	13,250	11,900	10,650	8,480	6,620	5,760	4,930	–	5.7	1.0
	KWO200E4S**	27,600	22,400	20,000	17,900	15,950	14,150	12,550	9,700	7,310	6,250	5,260	–	6.8	1.4
	KWO250E4S**	30,800	24,900	22,400	20,100	18,050	16,150	14,500	11,550	9,020	7,850	6,710	–	7.6	1.7
	KWO300E4S**	40,600	32,900	29,500	26,500	23,800	21,300	19,100	15,250	11,900	10,350	8,860	–	10	2.6
	KWO350E4S**	46,100	37,300	33,500	29,900	26,700	23,700	20,900	16,100	12,050	10,200	8,490	–	11.3	3.2
	KWO400E4S**	50,600	40,900	36,800	33,000	29,600	26,600	23,800	18,950	14,800	12,900	11,050	–	12.5	1.7
	KWO450E4S**	57,500	46,500	41,800	37,500	33,700	30,200	27,100	21,600	16,850	14,650	12,550	–	14.2	2.1
	KWO500E4S**	62,100	52,000	47,200	42,600	38,300	34,200	30,400	23,600	17,900	15,550	13,500	–	16.1	2.6
	KWO600E4S**	76,500	63,800	57,900	52,300	47,000	42,100	37,400	29,100	22,200	19,350	16,750	–	19.5	3.6
R407C	KWO060M4S**	10,200	8,230	7,370	6,570	5,830	5,150	4,530	3,410	2,420	–	–	–	2.5	1.0
	KWO080M4S**	12,150	9,860	8,840	7,890	7,010	6,190	5,450	4,130	3,030	–	–	–	3.1	1.3
	KWO100M4S**	14,213	11,531	10,337	9,224	8,196	7,237	6,371	4,827	3,541	–	–	–	3.6	1.7
	KWO130E4S**	16,100	13,250	11,950	10,700	9,570	8,490	7,470	5,570	3,780	–	–	–	4.0	2.1
	KWO150E4S**	19,200	15,800	14,250	12,800	11,450	10,150	8,920	6,660	4,530	–	–	–	4.7	2.8
	KWO180E4S**	21,900	18,050	16,250	14,600	13,050	11,600	10,200	7,600	5,170	–	–	–	5.4	0.9
	KWO200E4S**	26,400	21,700	19,600	17,600	15,750	13,950	12,300	9,180	6,260	–	–	–	6.5	1.2
	KWO250E4S**	29,800	24,500	22,100	19,850	17,750	15,750	13,850	10,350	7,060	–	–	–	7.3	1.5
	KWO300E4S**	40,100	32,900	29,700	26,700	23,800	21,200	18,650	13,950	9,510	–	–	–	9.6	2.2
	KWO350E4S**	44,500	36,600	33,000	29,600	26,500	23,500	20,700	15,450	10,550	–	–	–	10.6	2.6
	KWO400E4S**	49,800	41,000	37,000	33,200	29,700	26,300	23,200	17,300	11,800	–	–	–	11.9	1.4
	KWO450E4S**	55,200	45,400	41,000	36,800	32,900	29,200	25,700	19,150	13,050	–	–	–	13.2	1.7
	KWO500E4S**	64,400	54,100	49,200	44,600	40,200	36,000	32,000	25,000	19,100	–	–	–	16.5	2.4
	KWO600E4S**	78,100	65,400	59,400	53,800	48,500	43,400	38,700	30,300	23,200	–	–	–	19.7	3.3
R448A, R449A	KWO060M4S**	10,800	8,880	8,000	7,180	6,410	5,710	5,050	3,920	3,010	–	–	–	2.7	1.1
	KWO080M4S**	13,050	10,650	9,580	8,580	7,650	6,790	6,010	4,650	3,590	–	–	–	3.2	1.5
	KWO100M4S**	15,500	12,600	11,300	10,100	9,010	7,990	7,070	5,500	4,300	–	–	–	3.7	1.9
	KWO130E4S**	15,750	12,500	11,150	9,980	8,950	8,050	7,240	5,850	4,600	3,970	3,320	–	4.0	2.0
	KWO150E4S**	18,950	15,050	13,400	12,000	10,800	9,690	8,720	7,040	5,530	4,780	4,000	–	4.8	2.7
	KWO180E4S**	21,600	17,150	15,300	13,700	12,300	11,050	9,930	8,020	6,310	5,450	4,550	–	5.5	0.9
	KWO200E4S**	26,100	20,700	18,500	16,550	14,850	13,350	12,000	9,700	7,630	6,590	5,510	–	6.6	1.3
	KWO250E4S**	29,300	23,300	20,800	18,600	16,650	15,000	13,500	10,900	8,560	7,400	6,190	–	7.4	1.6
	KWO300E4S**	40,600	33,400	30,200	27,300	24,500	21,900	19,550	15,250	11,500	9,750	8,110	–	10.1	2.7
	KWO350E4S**	45,000	36,600	32,800	29,400	26,200	23,300	20,700	16,200	12,750	11,400	10,300	–	11.2	3.2
	KWO400E4S**	51,500	42,400	38,400	34,600	31,100	27,800	24,800	19,350	14,600	12,400	10,300	–	12.7	1.7
	KWO450E4S**	56,800	46,800	42,300	38,200	34,300	30,700	27,400	21,300	16,050	13,650	11,350	–	14.1	2.0
	KWO500E4S**	62,670	52,100	47,250	42,680	38,490	34,550	30,940	24,530	19,110	16,810	14,740	–	16.3	2.4
	KWO600E4S**	77,130	63,880	57,910	52,350	47,170	42,450	37,980	30,160	23,660	20,930	18,350	–	19.7	3.3

See notes on bottom page 6.

Performance @ 105° F Condensing Temperature - Scroll Models - Low Temp.

LOW TEMPERATURE

	MODEL NUMBER	CAPACITY DATA (BTUH) AT SUCTION TEMPERATURE									GPM REQ. FOR 85° F EWT^	
		0°F	-5°F	-10°F	-15°F	-20°F	-25°F	-30°F	-35°F	-40°F	GPM GAL/ MIN	WATER DP (PSI)
R404A	KWO100L4S**	4,650	3,980	3,480	3,040	2,660	2,340	2,060	1,820	1,620	1.6	0.5
	KWO130L4S**	6,320	5,520	4,800	4,160	3,590	3,100	2,680	2,340	2,070	2.1	0.7
	KWO160L4S**	7,570	6,680	5,860	5,120	4,450	3,850	3,320	2,870	2,480	2.4	0.9
	KWO230L4S**	11,850	10,450	9,190	8,080	7,080	6,170	5,340	4,550	3,780	3.8	1.9
	KWO250L4S**	13,600	12,100	10,800	9,530	8,410	7,400	6,480	5,640	4,880	4.4	2.3
	KWO300L4S**	15,100	13,400	11,900	10,600	9,360	8,240	7,230	6,300	5,440	4.7	2.6
	KWO350L4S**	18,800	16,800	14,900	13,200	11,600	10,200	8,980	7,820	6,770	5.9	3.9
	KWO400L4S**	21,900	19,400	17,200	15,100	13,200	11,500	9,980	8,590	7,340	6.8	1.4
	KWO500L4S**	26,600	23,700	21,000	18,600	16,400	14,400	12,600	11,000	9,560	8.3	2
	KWO600L4S**	31,300	27,900	24,800	22,000	19,500	16,300	15,100	13,100	11,300	9.5	2.6
R407A	KWO100L4S**	4,190	3,690	3,250	2,860	2,530	2,240	1,985	1,765	1,565	1.6	0.5
	KWO130L4S**	5,920	5,160	4,480	3,870	3,340	2,880	2,500	2,190	1,950	1.9	0.6
	KWO160L4S**	7,010	6,130	5,330	4,610	3,970	3,410	2,930	2,530	2,200	2.1	0.7
	KWO230L4S**	10,850	9,590	8,460	7,,450	6,540	5,720	4,970	4,270	3,590	3.4	1.6
	KWO250L4S**	12,200	10,800	9,560	8,400	7,340	6,380	5,520	4,750	4,060	4.0	2.1
	KWO300L4S**	13,550	11,750	10,200	8,810	7,610	6,560	5,630	4,810	4,070	4.3	2.2
	KWO350L4S**	16,950	14,700	12,750	11,000	9,480	8,160	7,000	5,980	5,080	5.3	3.3
	KWO400L4S**	20,400	18,050	15,850	13,800	11,900	10,200	8,740	7,560	6,700	6.3	1.2
	KWO500L4S**	24,800	22,100	19,450	17,000	14,800	12,850	11,150	9,790	8,770	7.6	1.7
	KWO600L4S**	29,100	25,700	22,700	19,800	17,300	15,000	13,100	11,500	10,300	9.0	2.4
R407C	KWO100L4S**	4,000	3,520	3,100	2,740	2,430	2,160	1,925	1,725	1,550	1.4	0.4
	KWO130L4S**	5,570	4,870	4,230	3,660	3,160	2,730	2,370	2,080	1,860	1.8	0.6
	KWO160L4S**	6,640	5,820	5,060	4,380	3,780	3,250	2,790	2,410	2,100	2.2	0.7
	KWO230L4S**	10,100	8,850	7,800	6,890	6,100	5,380	4,700	4,010	3,280	3.2	1.5
	KWO250L4S**	11,460	10,090	8,910	7,830	6,840	5,950	5,150	4,420	3,730	3.7	1.9
	KWO300L4S**	13,000	11,300	9,770	8,450	7,290	6,280	5,390	4,600	3,890	4.1	2.0
	KWO350L4S**	16,200	14,100	12,200	10,500	9,080	7,810	6,700	5,730	4,860	5.1	3.1
	KWO400L4S**	19,550	17,350	15,200	13,200	11,400	9,750	8,350	7,240	6,440	6.0	1.1
	KWO500L4S**	23,800	21,100	18,600	16,300	14,200	12,300	10,600	9,350	8,400	7.4	1.6
	KWO600L4S**	27,400	24,300	21,400	18,700	16,300	14,200	12,300	10,900	9,840	8.5	2.1
R448A, R449A	KWO100L4S**	4,420	3,890	3,430	3,030	2,690	2,380	2,110	1,865	1,635	1.5	0.4
	KWO130L4S**	6,160	5,410	4,720	4,100	3,550	3,070	2,660	2,310	2,040	1.9	0.6
	KWO160L4S**	7,290	6,430	5,630	4,910	4,250	3,670	3,160	2,720	2,350	2.1	0.7
	KWO230L4S**	11,050	9,750	8,590	7,570	6,670	5,870	5,130	4,440	3,770	3.5	1.6
	KWO250L4S**	12,800	11,350	10,050	8,840	7,760	6,780	5,900	5,110	4,400	4.0	2.0
	KWO300L4S**	14,150	12,550	11,150	9,830	8,660	7,590	6,630	5,760	4,970	4.4	2.3
	KWO350L4S**	17,700	15,700	13,900	12,250	10,750	9,440	8,240	7,160	6,200	5.4	3.4
	KWO400L4S**	20,900	18,500	16,300	14,200	12,400	10,800	9,390	8,170	7,140	6.5	1.3
	KWO500L4S**	25,700	22,700	20,100	17,600	15,500	13,500	11,800	10,300	9,050	8.0	1.9
	KWO600L4S**	30,800	27,300	24,200	21,300	18,800	16,500	14,400	12,600	11,000	9.6	2.6

* Each asterisk represents a variable character based upon voltage and vintage ordered. See page 3 for nomenclature.

Shaded area = 20°F Max Superheat

^ GPM (gallons per minute) and pressure drop @ highest evap rating and 85° F entering water temperature (EWT).

DP = Differential pressure flow measurement (DP Flow)

Electrical Data - All Models

MODEL DATA		AMPS @ 208-230V/1/60 Hz		AMPS @ 208-230V/3/60 Hz		AMPS @ 460V/3/60 Hz	
MODEL NUMBER	COMPRESSOR. MODEL	COMPRESSOR		COMPRESSOR		COMPRESSOR	
		RLA	LRA	RLA	LRA	RLA	LRA
Extended Medium Temperature Hermetic ^							
KWH055E4S**	RST45C1E	4.6	26.5	–	–	–	–
KWH080E4S**	RST55C1E	6.1	33.7	–	–	–	–
KWH090E4S**	RST64C1E	8.1	43.0	–	–	–	–
KWH100E4S**	RST70C1E	6.9	46.0	4.9	36.0	–	–
KWH125E4S**	RST97C1E	9.0	51.0	5.4	36.0	–	–
Extended Medium Temperature Scroll^^							
KWO060M4S**	ZB06KAE	5.4	36.0	3.1	38.9	–	–
KWO080M4S**	ZB07KAE	5.9	48.9	3.4	38.9	–	–
KWO100M4S**	ZB08KAE	7.2	46.7	3.6	38.9	–	–
KWO130E4S**	ZS09KAE	9.0	40.3	7.2	55.4	3.4	28.0
KWO150E4S**	ZS11KAE	11.3	55.0	9.3	58.0	3.8	28.0
KWO180E4S**	ZS13KAE	10.8	56.0	8.7	58.0	4.3	29.0
KWO200E4S**	ZS15KAE	14.1	68.0	9.6	58.0	4.8	29.0
KWO250E4S**	ZS19KAE	16.2	75.0	12.3	73.0	5.8	38.0
KWO300E4S**	ZS21KAE	20.8	112.0	13.7	93.0	6.2	48.0
KWO350E4S**	ZS26KAE	21.2	104.0	13.9	93.0	6.2	48.0
KWO400E4S**	ZS29KAE	23.4	137.0	18.4	114.0	8.4	58.0
KWO450E4S**	ZS33KAE	23.0	146.0	20.0	114.0	9.0	52.0
KWO500E4S**	ZS38K4E	28.5	169.0	19.2	123.0	8.7	62.0
KWO600E4S**	ZS45K4E	–	–	21.5	156.0	10.3	75.0
Low Temperature Scroll ‡							
KWO100L4S**	ZF03KAE	5.4	42.3	3.7	31.7	–	–
KWO130L4S**	ZF04KAE	6.6	40.3	6	55.4	–	–
KWO160L4S**	ZF05KAE	7.8	55	6.6	58	–	–
KWO230L4S**	ZF07KAE	12.4	75	7.8	58	3.6	28.0
KWO250L4S**	ZF08K4E	14.7	73	8.7	63	4.5	31.0
KWO300L4S**	ZF09K4E	12.8	88	8.7	77	4.5	39.0
KWO350L4S**	ZF11K4E	16.3	109	10.9	88	5.8	44.0
KWO400L4S**	ZF13K4E	22.4	129	11.9	99	6.4	49.5
KWO500L4S**	ZF15K4E	24.7	169	17	123	8.0	62.0
KWO600L4S**	ZF18K4E	–	–	19.6	156	8.0	75.0

* Each asterisk represents a variable character based upon voltage and vintage ordered. See page 3 for nomenclature.

RLA = Rated Load Amps LRA = Locked Rotor Amps

MCA = Minimum Circuit Ampacity MCA includes 1 amp allowance for control circuit requirement.

^ KWH055E4S, KWH080E4S and KWH090E4S are not available in 208-230V/3/60 Hz or 460V/3/60 Hz. KWH100E4S, and KWH125E4S are not available in 460V/3/60 Hz.

^^ KWO060M4S, KWO080M4S and KWO100M4S are not available in 460V/3/60 Hz. KWO600E4S is not available in 208-230V/1/60 Hz.

‡ KWO100L4S, KWO130L4S and KWO160L4S are not available in 460V/3/60 Hz. KWO600L4S is not available in 208-230V/1/60 Hz.

Air Defrost Data - All Models

MODEL DATA		208-230V/1/60 Hz				208-230V/3/60 Hz				460V/3/60 Hz			
MODEL NUMBER	COMP. MODEL	AIR DEFROST MCA	AIR DEFROST MOPD	MAX EVAP. FAN AMPS†	MAX DEF. AMPS†	AIR DEFROST MCA	AIR DEFROST MOPD	MAX EVAP. FAN AMPS†	MAX DEF. AMPS†	AIR DEFROST MCA	AIR DEFROST MOPD	MAX EVAP. FAN AMPS†	MAX DEF. AMPS†
Extended Medium Temperature Hermetic ^													
KWH055E4S**	RST45C1E	15.0	15	4.0	15.0	–	–	–	–	–	–	–	–
KWH080E4S**	RST55C1E	15.0	10	4.0	15.0	–	–	–	–	–	–	–	–
KWH090E4S**	RST64C1E	15.0	15	4.0	15.0	–	–	–	–	–	–	–	–
KWH100E4S**	RST70C1E	15.0	15	4.0	15.0	15.0	15	4.0	15.0	–	–	–	–
KWH125E4S**	RST97C1E	15.0	20	6.0	15.0	15.0	15	6.0	15.0	–	–	–	–
Extended Medium Temperature Scroll^^													
KWO060M4S**	ZB06KAE	15.0	15	4.0	15.0	15.0	15	4.0	15.0	–	–	–	–
KWO080M4S**	ZB07KAE	15.0	15	4.0	15.0	15.0	15	4.0	15.0	–	–	–	–
KWO100M4S**	ZB08KAE	15.0	15	4.0	15.0	15.0	15	4.0	15.0	–	–	–	–
KWO130E4S**	ZS09KAE	15.0	20	4.0	15.0	15.0	15	4.0	15.0	15.0	15	2.0	15.0
KWO150E4S**	ZS11KAE	15.1	25	6.0	20.0	15.0	20	6.0	15.0	15.0	15	3.0	15.0
KWO180E4S**	ZS13KAE	14.5	25	6.0	20.0	15.0	20	6.0	15.0	15.0	15	3.0	15.0
KWO200E4S**	ZS15KAE	18.6	30	10.0	25.0	15.0	20	10.0	20.0	15.0	15	5.0	15.0
KWO250E4S**	ZS19KAE	21.2	35	10.0	25.0	16.3	25	10.0	25.0	15.0	15	5.0	15.0
KWO300E4S**	ZS21KAE	27.0	45	12.0	30.0	18.1	30	12.0	25.0	15.0	10	6.0	15.0
KWO350E4S**	ZS26KAE	27.5	45	12.0	30.0	18.3	30	12.0	25.0	15.0	10	6.0	15.0
KWO400E4S**	ZS29KAE	30.2	50	12.0	30.0	24.0	40	12.0	30.0	15.0	15	6.0	15.0
KWO450E4S**	ZS33KAE	29.7	50	12.0	30.0	26.0	45	12.0	30.0	15.0	20	6.0	20.0
KWO500E4S**	ZS38K4E	36.6	60	12.0	30.0	25.0	40	12.0	30.0	15.0	20	6.0	20.0
KWO600E4S**	ZS45K4E	–	–	–	–	27.8	45	12.0	30.0	13.8	20	6.0	20.0

* Each asterisk represents a variable character based upon voltage and vintage ordered. See page 3 for nomenclature.

MCA = Minimum Circuit Ampacity MOPD = Maximum Overcurrent Protection

MCA includes 1 amp allowance for control circuit requirement.

† Note: Maximum Evap. fan amps and maximum defrost amps are shown to provide ratings when electric defrost is required and is an optional feature. Maximum Amp value used to determine MOPD. Exceeding these values invalidates the listed MOPD and requires a revised calculation. Contact Application Engineering when amp draw requirements deviate from the chart values.

^ KWH055E4S, KWH080E4S and KWH090E4S are not available in 208-230V/3/60 Hz or 460V/3/60 Hz. KWH100E4S and KWH125E4S are not available in 460V/3/60 Hz.

^^ KWO060M4S, KWO080M4S and KWO100M4S are not available in 460V/3/60 Hz. KWO600E4S is not available in 208-230V/1/60 Hz.

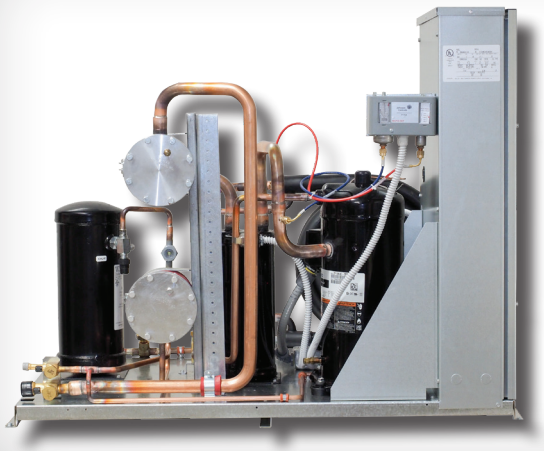

Replaceable core liquid and suction filters available as an option on 4 to 6 HP models

Electric Defrost Data - All Models

MODEL DATA		208-230V/1/60 Hz					208-230V/3/60 Hz					460V/3/60 Hz				
MODEL NUMBER	COMP. MODEL	ELECTRIC DEFROST		ELEC. DEF. KIT†	MAX EVAP. FAN AMPS †	MAX DEF. AMPS †	ELECTRIC DEFROST		ELEC. DEF. KIT†	MAX EVAP. FAN AMPS †	MAX DEF. AMPS †	ELECTRIC DEFROST		ELEC. DEF. KIT†	MAX EVAP. FAN AMPS †	MAX DEF. AMPS †
		MCA	MOPD				MCA	MOPD				MCA	MOPD			
Extended Medium Temperature Hermetic ^																
KWH055E4S**	RST45C1E	19.7	20	ED-5	4.0	15.0	–	–	–	–	–	–	–	–	–	–
KWH080E4S**	RST55C1E	19.7	20	ED-5	4.0	15.0	–	–	–	–	–	–	–	–	–	–
KWH090E4S**	RST64C1E	19.7	20	ED-5	4.0	15.0	–	–	–	–	–	–	–	–	–	–
KWH100E4S**	RST70C1E	19.7	20	ED-5	4.0	15.0	19.7	20	ED-5	4.0	15.0	–	–	–	–	–
KWH125E4S**	RST97C1E	19.7	25	ED-5	6.0	15.0	19.7	20	ED-5	6.0	15.0	–	–	–	–	–
Extended Medium Temperature Scroll^^																
KWO060M4S**	ZB06KAE	19.7	20	ED-5	4.0	15.0	19.7	20	ED-5	4.0	15.0	–	–	–	–	–
KWO080M4S**	ZB07KAE	19.7	20	ED-5	4.0	15.0	19.7	20	ED-5	4.0	15.0	–	–	–	–	–
KWO100M4S**	ZB08KAE	19.7	20	ED-5	4.0	15.0	19.7	20	ED-5	4.0	15.0	–	–	–	–	–
KWO130E4S**	ZS09KAE	19.7	25	ED-5	4.0	15.0	19.7	20	ED-5	4.0	15.0	19.7	20	ED-17	2.0	15.0
KWO150E4S**	ZS11KAE	26.0	30	ED-6	6.0	20.0	19.7	25	ED-5	6.0	15.0	19.7	20	ED-17	3.0	15.0
KWO180E4S**	ZS13KAE	26.0	30	ED-6	6.0	20.0	19.7	25	ED-5	6.0	15.0	19.7	20	ED-17	3.0	15.0
KWO200E4S**	ZS15KAE	32.2	40	ED-7	10.0	25.0	26.0	30	ED-6	10.0	20.0	19.7	20	ED-17	5.0	15.0
KWO250E4S**	ZS19KAE	32.2	45	ED-7	10.0	25.0	32.2	35	ED-7	10.0	25.0	19.7	20	ED-17	5.0	15.0
KWO300E4S**	ZS21KAE	39.0	50	ED-10	12.0	30.0	32.2	40	ED-7	12.0	25.0	19.7	20	ED-17	6.0	15.0
KWO350E4S**	ZS26KAE	39.5	60	ED-10	12.0	30.0	32.2	40	ED-7	12.0	25.0	19.7	20	ED-17	6.0	15.0
KWO400E4S**	ZS29KAE	42.2	60	ED-10	12.0	30.0	38.5	50	ED-11	12.0	30.0	19.7	25	ED-17	6.0	15.0
KWO450E4S**	ZS33KAE	41.7	60	ED-10	12.0	30.0	38.5	50	ED-11	12.0	30.0	26.0	30	ED-18	6.0	20.0
KWO500E4S**	ZS38K4E	48.6	60	ED-10	12.0	30.0	38.5	50	ED-11	12.0	30.0	26.0	30	ED-18	6.0	20.0
KWO600E4S**	ZS45K4E	–	–	–	–	–	39.8	60	ED-11	12.0	30.0	26.0	30	ED-18	6.0	20.0
Low Temperature Scroll ‡																
KWO100L4S**	ZF03KAE	19.7	20	ED-5	6	15	19.7	20	ED-5	6	15	–	–	–	–	–
KWO130L4S**	ZF04KAE	19.7	20	ED-5	6	15	19.7	20	ED-5	6	15	–	–	–	–	–
KWO160L4S**	ZF05KAE	19.7	20	ED-5	6	15	19.7	20	ED-5	6	15	–	–	–	–	–
KWO230L4S**	ZF07KAE	19.7	30	ED-5	6	15	19.7	20	ED-5	6	15	19.7	20	ED-17	5	15
KWO250L4S**	ZF08K4E	29.4	40	ED-6	10	20	26	30	ED-6	10	20	19.7	20	ED-17	5	15
KWO300L4S**	ZF09K4E	27	35	ED-6	10	20	26	30	ED-6	10	20	19.7	20	ED-17	5	15
KWO350L4S**	ZF11K4E	32.2	45	ED-7	10	25	32.2	35	ED-7	10	25	19.7	20	ED-17	5	15
KWO400L4S**	ZF13K4E	41	60	ED-7	12	25	32.2	35	ED-7	12	25	19.7	20	ED-17	6	15
KWO500L4S**	ZF15K4E	43.9	60	ED-11	12	30	38.5	50	ED-11	12	30	19.7	25	ED-17	6	15
KWO600L4S**	ZF18K4E						38.5	50	ED-11	12	30	19.7	25	ED-17	6	15

* Each asterisk represents a variable character based upon voltage and vintage ordered. See page 3 for nomenclature.

MCA = Minimum Circuit Ampacity MOPD = Maximum Overcurrent Protection

MCA includes 1 amp allowance for control circuit requirement.

† Note: Maximum Evap. fan amps and maximum defrost amps are shown to provide ratings when electric defrost is required and is an optional feature. Maximum Amp value used to determine MOPD. Exceeding these values invalidates the listed MOPD and requires a revised calculation. Contact Application Engineering when amp draw requirements deviate from the chart values.

^ KWH055E4S, KWH080E4S and KWH090E4S are not available in 208-230V/3/60 Hz or 460V/3/60 Hz. KWH100E4S and KWH125E4S are not available in 460V/3/60 Hz.

^^ KWO060M4S, KWO080M4S and KWO100M4S are not available in 460V/3/60 Hz. KWO600E4S is not available in 208-230V/1/60 Hz.

‡ KWO100L4S, KWO130L4S and KWO160L4S are not available in 460V/3/60 Hz. KWO600L4S is not available in 208-230V/1/60 Hz.

Specifications - All Models

MODEL DATA			CONNECTIONS (ODS)			PUMP DOWN CAPACITY			
						STANDARD RECEIVER			
MODEL NUMBER	COMPRESSOR MODEL	HP	LIQUID	SUCTION^^	WATER (OD)	90% R404A (LBS.)	90% R407A (LBS.)	90% R407C (LBS.)	90% R448A, R449A (LBS.)
Extended Medium Temperature Hermetic									
KWH055E4S**	RST45C1E	1/2	3/8	5/8	1/2"	5.9	6.4	6.7	6.1
KWH080E4S**	RST55C1E	1/2	3/8	5/8	1/2"	5.9	6.4	6.7	6.1
KWH090E4S**	RST64C1E	3/4	3/8	5/8	3/4"	5.9	6.4	6.7	6.1
KWH100E4S**	RST70C1E	3/4	3/8	5/8	3/4"	5.9	6.4	6.7	6.1
KWH125E4S**	RST97C1E	1	1/2	7/8	3/4"	11.0	12.1	12.7	11.6
Extended Medium Temperature Scroll									
KWO060M4S**	ZB06KAE	1/2	3/8	5/8	3/4"	5.9	6.4	6.7	6.1
KWO080M4S**	ZB07KAE	1/2	3/8	5/8	3/4"	5.9	6.4	6.7	6.1
KWO100M4S**	ZB08KAE	1	3/8	5/8	3/4"	5.9	6.4	6.7	6.1
KWO130E4S**	ZS09KAE	1-1/3	3/8	5/8	3/4"	5.9	6.4	6.7	6.1
KWO150E4S**	ZS11KAE	1-1/2	1/2	7/8	3/4"	11.0	12.1	12.7	11.6
KWO180E4S**	ZS13KAE	1-3/4	1/2	7/8	7/8"	11.0	12.1	12.7	11.6
KWO200E4S**	ZS15KAE	2	1/2	7/8	7/8"	13.6	15.0	15.7	14.3
KWO250E4S**	ZS19KAE	2-1/2	1/2	7/8	7/8"	13.6	15.0	15.7	14.3
KWO300E4S**	ZS21KAE	3	5/8	1-1/8	1-1/8"	13.6	15.0	15.7	14.3
KWO350E4S**	ZS26KAE	3-1/2	5/8	1-1/8	1-1/8"	13.6	15.0	15.7	14.3
KWO400E4S**	ZS29KAE	4	5/8	1-1/8	2-1/8"	13.6	15.0	15.7	14.3
KWO450E4S**	ZS33KAE	4-1/2	5/8	1-1/8	2-1/8"	13.6	15.0	15.7	14.3
KWO500E4S**	ZS38K4E	5	5/8	1-1/8	2-1/8"	13.6	15.0	15.7	14.3
KWO600E4S**	ZS45K4E	6	5/8	1-1/8	2-1/8"	13.6	15.0	15.7	14.3
Low Temperature Scroll									
KWO100L4S**	ZF03KAE	1	3/8	7/8	3/4"	11.0	12.1	12.7	11.6
KWO130L4S**	ZF04KAE	1-1/3	3/8	7/8	3/4"	11.0	12.1	12.7	11.6
KWO160L4S**	ZF05KAE	1-1/2	3/8	7/8	3/4"	11.0	12.1	12.7	11.6
KWO230L4S**	ZF07KAE	2	3/8	7/8	3/4"	11.0	12.1	12.7	11.6
KWO250L4S**	ZF08K4E	2-1/2	3/8	7/8	3/4"	13.6	15.0	15.7	14.3
KWO300L4S**	ZF09K4E	3	3/8	7/8	3/4"	13.6	15.0	15.7	14.3
KWO350L4S**	ZF11K4E	3-1/2	3/8	7/8	3/4"	13.6	15.0	15.7	14.3
KWO400L4S**	ZF13K4E	4	1/2	1-1/8	7/8"	13.6	15.0	15.7	14.3
KWO500L4S**	ZF15K4E	5	1/2	1-1/8	7/8"	13.6	15.0	15.7	14.3
KWO600L4S**	ZF18K4E	6	1/2	1-1/8	7/8"	13.6	15.0	15.7	14.3

* Each asterisk represents a variable character based upon voltage and vintage ordered. See page 3 for nomenclature.

^^ Connection size with or without factory installed liquid and/or suction line assembly.

Specifications - All Models

MODEL DATA		CABINET SIZE††	DIMENSIONS (IN.)			APPROX. SHIP WT. (LBS.)	SOUND DATA dBA†
MODEL NUMBER	COMPRESSOR MODEL		D	W	H		
Extended Medium Temperature Hermetic							
KWH055E4S**	RST45C1E	FW1	28-1/16	27-1/8	18-5/8	152	65
KWH080E4S**	RST55C1E	FW1	28-1/16	27-1/8	18-5/8	156	65
KWH090E4S**	RST64C1E	FW1	28-1/16	27-1/8	18-5/8	160	65
KWH100E4S**	RST70C1E	FW1	28-1/16	27-1/8	18-5/8	167	65
KWH125E4S**	RST97C1E	FW2	28-1/16	39-1/8	19-7/8	195	69
Extended Medium Temperature Scroll							
KWO060M4S**	ZB06KAE	FW1	28-1/16	27-1/8	18-5/8	195	67
KWO080M4S**	ZB07KAE	FW1	28-1/16	27-1/8	18-5/8	195	67
KWO100M4S**	ZB08KAE	FW1	28-1/16	27-1/8	18-5/8	195	67
KWO130E4S**	ZS09KAE	FW1	28-1/16	27-1/8	18-5/8	195	67
KWO150E4S**	ZS11KAE	FW2	28-1/16	39-1/8	19-7/8	205	68
KWO180E4S**	ZS13KAE	FW2	28-1/16	39-1/8	19-7/8	210	68
KWO200E4S**	ZS15KAE	FW3	28-1/16	39-1/8	21-1/8	215	68
KWO250E4S**	ZS19KAE	FW3	28-1/16	39-1/8	21-1/8	230	69
KWO300E4S**	ZS21KAE	FW4	32-13/16	43-1/8	21-1/8^	305	69
KWO350E4S**	ZS26KAE	FW4	32-13/16	43-1/8	21-1/8^	325	69
KWO400E4S**	ZS29KAE	FW4	32-13/16	43-1/8	21-1/8^	352	71
KWO450E4S**	ZS33KAE	FW4	32-13/16	43-1/8	21-1/8^	375	71
KWO500E4S**	ZS38K4E	FW4	32-13/16	43-1/8	21-1/8^	383	71
KWO600E4S**	ZS45K4E	FW4	32-13/16	43-1/8	21-1/8^	405	73
Low Temperature Scroll							
KWO100L4S**	ZF03KAE	FW2	28-1/16	39-1/8	19-7/8	230	68
KWO130L4S**	ZF04KAE	FW2	28-1/16	39-1/8	19-7/8	230	68
KWO160L4S**	ZF05KAE	FW2	28-1/16	39-1/8	19-7/8	230	68
KWO230L4S**	ZF07KAE	FW2	28-1/16	39-1/8	19-7/8	230	68
KWO250L4S**	ZF08K4E	FW3	28-1/16	39-1/8	21-1/8	240	70
KWO300L4S**	ZF09K4E	FW3	28-1/16	39-1/8	21-1/8	245	70
KWO350L4S**	ZF11K4E	FW3	28-1/16	39-1/8	21-1/8	255	70
KWO400L4S**	ZF13K4E	FW4	32-13/16	43-1/8	21-1/8^	352	70
KWO500L4S**	ZF15K4E	FW4	32-13/16	43-1/8	21-1/8^	367	71
KWO600L4S**	ZF18K4E	FW4	32-13/16	43-1/8	21-1/8^	383	73

* Each asterisk represents a variable character based upon voltage and vintage ordered. See page 3 for nomenclature.

† Estimated dBA values at 10 feet from the unit. Correction factors: Deduct 6 dBA for 20 to 40 feet, 12 dBA @ 40 to 60 feet. Ratings at the outlet of the discharge air. The actual measurements may vary depending upon installation variables. Environmental factors may have a significant influence on this data.

†† See pages 12 for associated drawings.

^ Maximum height is 35" when using a two defrost contactor kit or replaceable core liquid and suction filters.

Physical Dimensions - All Models

** Dimensions are in inches.*
Due to continuing product development, specifications are subject to change without notice.

FW1

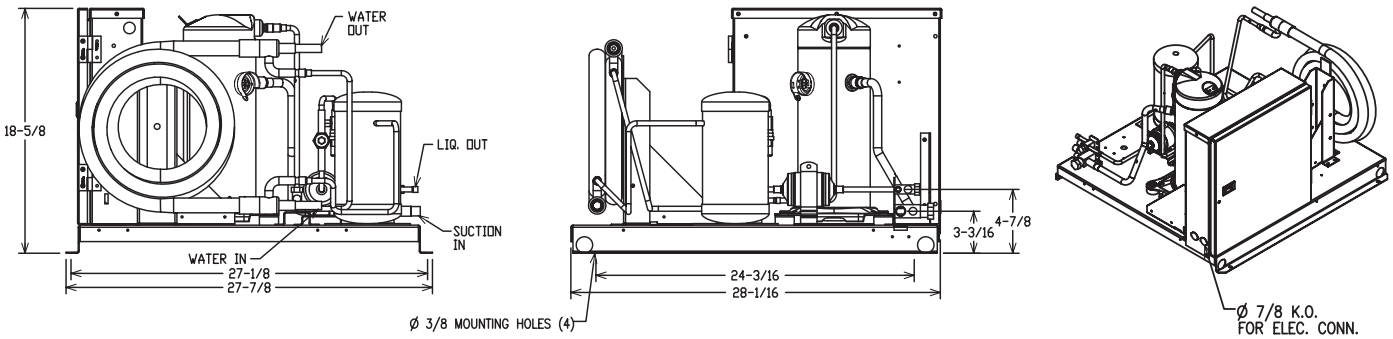

FW2

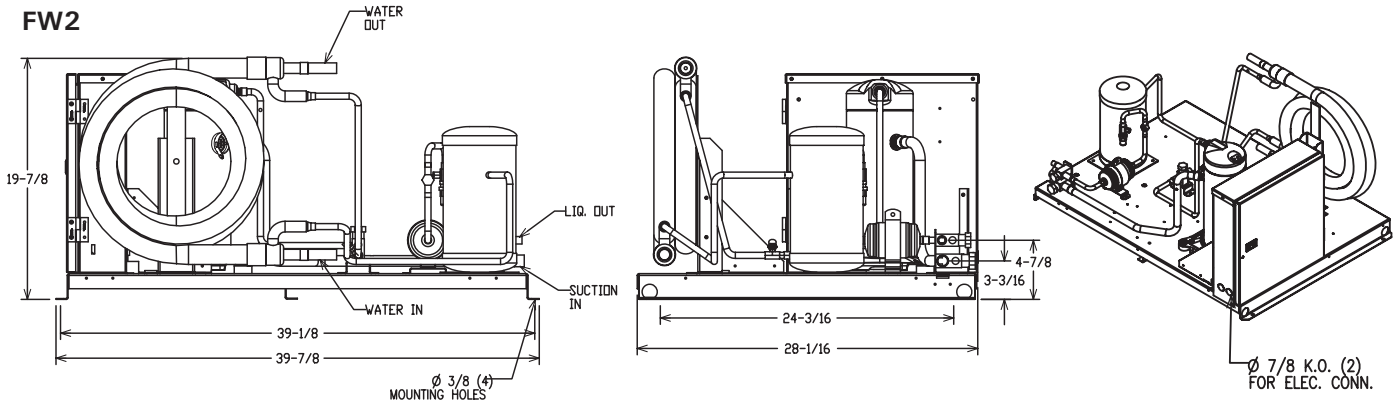

FW3

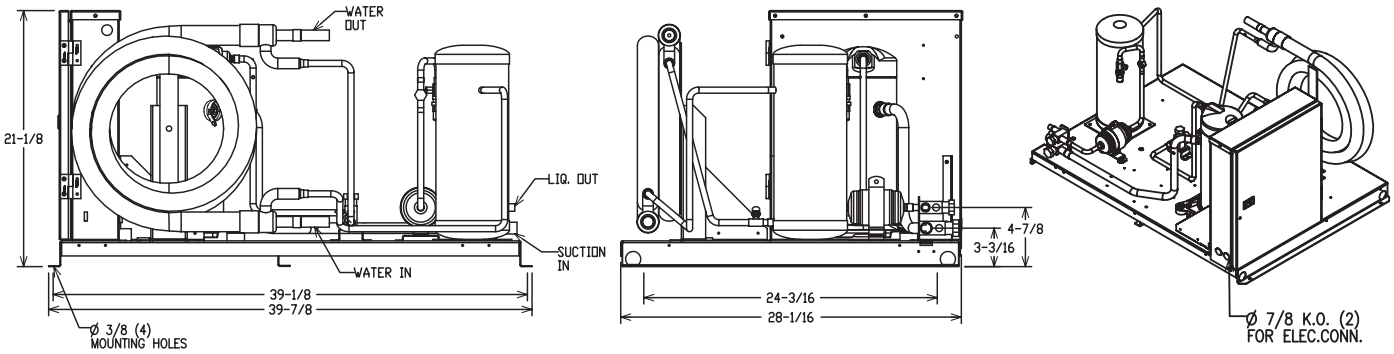
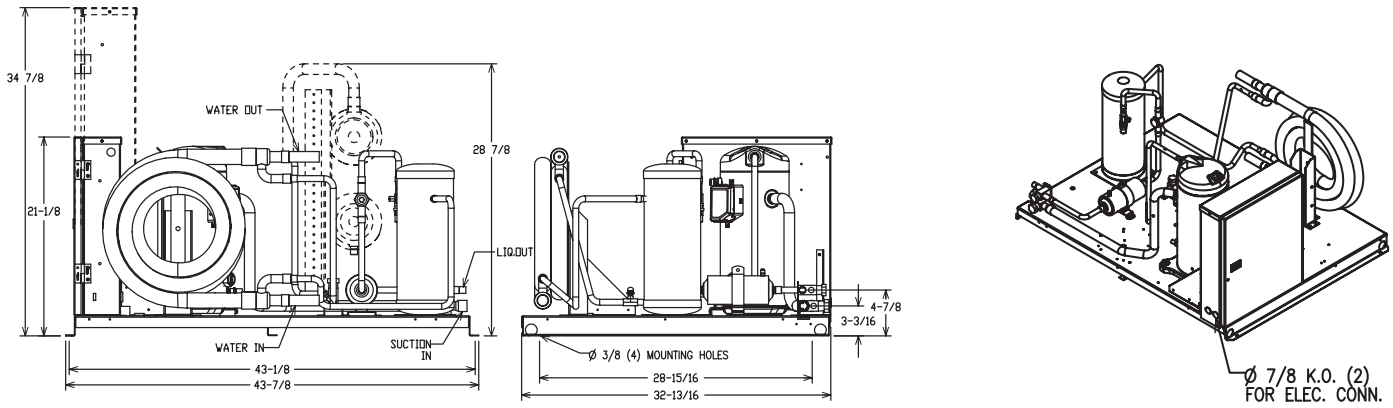
FW4