KRAMER

Catalog KM-KFH-0423A
Replaces KM-KFH-1022A

K-SERIES

NEXT-GEN KOMPACT
1/2 TO 6 HP MULTI-REFRIGERANT AIR COOLED CONDENSING UNITS

c UL us

The Next Generation of Kompacts are Here!

Kramer's Next-Gen Kompact K-Series ½ through 6 HP condensing units are engineered with an exciting new design that provides increased efficiency, more standard features, easier serviceability, and more catalogued options.

Next-Gen Kompacts are ideally suited for use in a variety of commercial applications such as cafeterias, convenience stores, restaurants and fast food outlets while providing the versatility to excel in a full array of other applications. These new K-Series units provide a winning combination of high quality, increased flexibility and greatly improved efficiency for even lower long-term operating costs.

The small profile product line is designed to utilize R404A or other low GWP refrigerants R407A, R407C, R448A and R449A. Units are available with low-cost hermetic or efficient and quiet scroll compressors. The standard Next-Gen K-Series is rated for operation in ambient air temperatures up to 110°F.

Integral Subcooling Circuit

All Next-Gen Kompact units feature an integral subcooling circuit that allows saturated liquid to flow from the receiver to the condenser where the refrigerant is subcooled by ambient air. This provides an average of 3 to 5°F of subcooling for higher efficiency while assuring optimal expansion device operation.

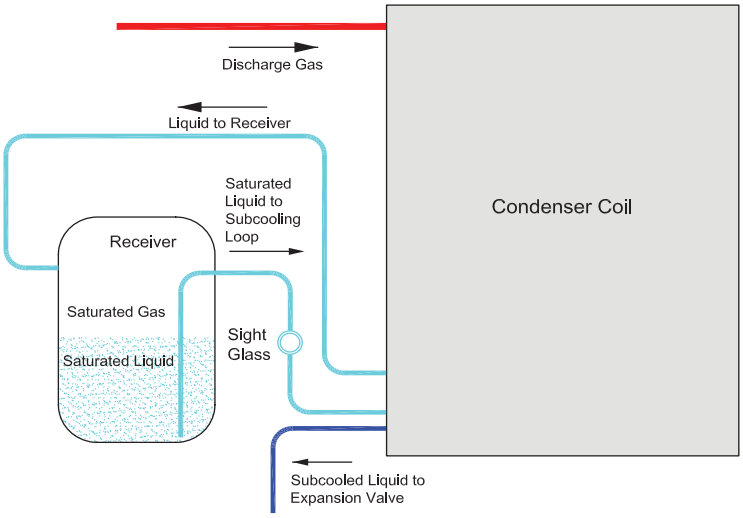

Table of Contents	Page(s)
Features and Options Chart	4
Model Nomenclature	5
Capacity Data (BTUH) - Extended Medium Temperature - Hermetic R404A	6
Capacity Data (BTUH) - Extended Medium Temperature - Hermetic R407A, R407C	6
Capacity Data (BTUH) - Extended Medium Temperature - Hermetic R448A, R449A	6
Capacity Data (BTUH) - Extended Medium Temperature - Scroll R404A	7
Capacity Data (BTUH) - Extended Medium Temperature - Scroll R407A	8
Capacity Data (BTUH) - Extended Medium Temperature - Scroll R407C	9
Capacity Data (BTUH) - Extended Medium Temperature - Scroll R448A, R449A	10
Capacity Data (BTUH) - Low Temperature - Scroll R404A	11
Capacity Data (BTUH) - Low Temperature - Scroll R407A	12
Capacity Data (BTUH) - Low Temperature - Scroll R407C	13
Capacity Data (BTUH) - Low Temperature - Scroll R448A, R449A	14
Electrical Data - Hermetic	15
Electrical Data - Scroll	16-17
Specifications - All Models	18-20
Physical Dimensions and Drawings - All Models	21-22

Standard Features

- Hermetic or Scroll Compressors
- All-weather - Galvanized steel painted housing
- Generously sized high efficiency condenser, enhanced copper tubes/aluminum fins
- Integral Liquid Subcooling Circuit provides subcooled liquid to the expansion device
- Base mounted shut-off valves placed external to cabinet for easy access
- Liquid line kit with filter/drier and sight glass with moisture indicator
- Suction line piping
- Larger electrical panel with hinged/removable door
- Color coded point-to-point wiring
- Crankcase heater
- Refrigerant receiver with isolation valve and pressure relief plug
- "A" Vintage Units feature PSC Motors, "B" Vintage Units feature High Efficiency Motors
- Encapsulated high pressure (auto reset) and low pressure (auto reset) controls (adjustable low pressure control is standard on low temperature models)
- Electronic defrost timer with defrost contactor/relay on low temperature standard models (2 evaps. maximum)
- Electronic air defrost timer (Medium temperature standard models only)
- UL and cUL listed for outdoor use

Flooded models include flooded head pressure control as a standard feature.

Non-flooded models include mild ambient fan cycle control as a standard feature.

Easy access / removable control panel door

Color-coded and numbered point-to-point wiring for easy maintenance

Quick access to shut-off valves from cabinet exterior

Replaceable core liquid and suction filters available as an option for 4 to 6 HP flooded and non-flooded models

Options

- Adjustable high/adjustable low pressure control
- Liquid line without components: Pipe only
- Liquid line with premium components: Replaceable core filter/drier and sight glass (Option on models in FM4 Cabinet*)
- Suction line components: Sealed filter
- Suction line components: Replaceable core filter (Option on models in FM4 Cabinet*)
- Suction line accumulator
- Oil separator (Option on models in FM4 Cabinet*)
- Oversized receiver
- Pumpdown toggle switch
- Heated and insulated receiver
- Phase loss monitor
- EC fan motors (Option on Vintage "A" models)
- Thru-the-door non-fused disconnect switch (Option on models in FM3 or FM4 Cabinet*)
- Thru-the-door fused disconnect switch
- External fused disconnect
- 316 Stainless steel cabinet
- Mechanical air defrost timer
- Crankcase pressure regulating valve
- Hail/Snow guards

* See pages 23-24 for associated cabinet size drawings.

Features and Options

FEATURES AND FACTORY INSTALLED OPTIONS		
OPTIONS DESCRIPTION	**MEDIUM TEMPERATURE**	**LOW TEMPERATURE**
CRANKCASE HEATER	STANDARD	
FIXED HIGH/FIXED LOW PRESSURE CONTROL	STANDARD	N/A
FIXED HIGH/ADJUSTABLE LOW PRESSURE CONTROL	OPTION	STANDARD
ADJUSTABLE HIGH/ADJUSTABLE LOW PRESSURE CONTROL	OPTION ON ALL MODELS	
LIQUID LINE WITH COMPONENTS: SEALED FILTER & SIGHT GLASS	STANDARD	
LIQUID LINE WITHOUT COMPONENTS: PIPE ONLY	OPTION ON ALL MODELS	
LIQUID LINE WITH PREMIUM COMPONENTS: REPLACEABLE CORE FILTER/ DRIER & SIGHT GLASS	OPTION ON MODELS IN FM4 CABINET^	
SUCTION LINE COMPONENTS: SEALED FILTER	OPTION ON ALL MODELS	
SUCTION LINE COMPONENTS: REPLACEABLE CORE FILTER	OPTION ON MODELS IN FM4 CABINET^	
SUCTION LINE ACCUMULATOR†	OPTION ON ALL MODELS	
OIL SEPERATOR	OPTION ON MODELS IN FM4 CABINET^	
OVERSIZED RECEIVER	OPTION ON ALL MODELS	
PUMPDOWN TOGGLE SWITCH	OPTION ON ALL MODELS	
HEATED AND INSULATED RECEIVER	OPTION ON ALL MODELS	
PHASE LOSS MONITOR	OPTION ON ALL MODELS	
EC FAN MOTORS	OPTION ON ALL "A" VINTAGE MODELS	
COPPER FINS OR ELECTRO FIN COATED COIL	CONTACT FACTORY	
THRU-THE-DOOR - NON - FUSED - DISCONNECT SWITCH	OPTION ON ALL MODELS	
EXTERNAL FUSED DISCONNECT	OPTION ON ALL MODELS	
316 STAINLESS STEEL CABINET	CONTACT FACTORY	

N/A = Not Available

† Requires suction line components.

^ See pages 22-24 for associated cabinet size drawings.

FACTORY INSTALLED OPTIONS - COMMON DEFROST COMPONENTS		
OPTIONS DESCRIPTION	**MEDIUM TEMPERATURE**	**LOW TEMPERATURE**
ELECTRONIC AIR DEFROST TIMER	STANDARD	N/A
MECHANICAL AIR DEFROST TIMER	OPTION	N/A
DEFROST KIT	OPTION	STANDARD*

* See Electrical Data Tables on pages 17-19 for Low Temperature Standard Defrost Kits and Medium Temperature Most Common Defrost Kits detail. Consult List Price Book for complete offering of Defrost Kit Options and Standard Defrost Component Deductions.

SHIPPED LOOSE ACCESSORIES		
OPTIONS DESCRIPTION	**MEDIUM TEMPERATURE**	**LOW TEMPERATURE**
CRANKCASE PRESSURE REGULATING VALVE	CONTACT FACTORY	
EXTERNAL FUSED DISCONNECT	OPTION ON ALL MODELS	
TWO TIERED STACKING RACK	CONTACT FACTORY	
SNOW / HAIL GUARDS	OPTION ON ALL MODELS	

MODEL NUMBER NOMENCLATURE								
CONFIGURABLE BASE MODEL								PRE-CONFIGURTION CODES[3]
K	F	H	150	E	4S	D	A	NT
Brand	Style	Compressor Style	Horsepower	Temperature Range	Refrigerant Type	Voltage Code	Vintage[2]	Pre-Assembly Code
K - Kramer	**F** - Flooded **B** - Non-Flooded	**H** - Hermetic **O** - Scroll		**E** - Extended Medium **L** - Low **M** - Medium	**44** - R404A Only **4S** - Multiple Refrigerants	**D** - 208-230/1/60 **E** - 208-230/3/60 **G** - 460/3/60 **M** - 200-220/1/50[1] **N** - 200-220/3/50[1] **Q** - 380/3/50[1]	**A** or **B**	**NT** - No Defrost Timer /Kit[4] **ALNT** - Adjustable Low Pressure Control and No Defrost Timer[5]

Note(s):

1. 50 Hz available. Contact Electrical Tables for Specific Model Availability or Contact Factory for additional information.
2. **A** Vintage has standard PSC motor(s). **B** Vintage has standard High Efficiency motors For specific model number vintages, please refer to the current Price Book or contact factory.
3. Pre-Configuration Codes are used to show common Factory Mounted options. Pre-Configuration Codes are not available for every model. For specific model availability, see the respective Pre-Configuration pricing tables in the current Price Book or contact your local Russell sales representative.
4. "NT" pre-configuration code is available on Flooded Models with 208-230/1/60 or 208-230/3/60 voltage.
5. "ALNT" pre-configuration code is available on Flooded Medium/Extended Medium Temperature models with 208-230/1/60 or 208-230/3/60 voltage. Please note, Adjustable Low Pressure Controls are standard on Low Temperature MiniCon Models.

See specification pages 20-21 for compressor horsepower.

Capacity Data (BTUH) - Extended Medium Temperature R404A Hermetic - 60 Hz‡

SUCTION TEMPERATURE

AMBIENT TEMPERATURE	MODEL	COMP. MODEL	30°F	25°F	20°F	10°F	0°F	-10°F	-20°F
90°F	K*H100E4S**	RST70C1E	10,590	9,570	8,610	6,820	5,250	3,920	2,830
	K*H125E4S**	RST97C1E	14,260	13,080	11,910	9,690	7,640	5,820	4,300
95°F	K*H100E4S**	RST70C1E	10,090	9,110	8,190	6,480	4,970	3,690	2,640
	K*H125E4S**	RST97C1E	13,620	12,470	11,350	9,200	7,230	5,470	4,020
100°F	K*H100E4S**	RST70C1E	9,580	8,650	7,770	6,130	4,690	3,460	2,450
	K*H125E4S**	RST97C1E	12,960	11,860	10,780	8,710	6,810	5,120	3,730
110°F	K*H100E4S**	RST70C1E	8,550	7,700	6,900	5,420	4,100	2,980	2,060
	K*H125E4S**	RST97C1E	11,630	10,610	9,610	7,710	5,960	4,420	3,140

K*H055E4S and K*H080E4S are not available for use with R404A.

Capacity Data (BTUH) - Extended Medium Temperature R407C Hermetic - 60 Hz‡

SUCTION TEMPERATURE

AMBIENT TEMPERATURE	MODEL	COMP. MODEL	30°F	25°F	20°F	15°F	10°F	5°F	0°F
90°F	K*H100E4S**	RST70C1E	10,150	8,990	7,950	6,980	6,090	5,280	4,520
	K*H125E4S**	RST97C1E	13,850	12,350	10,970	9,710	8,550	7,470	6,450
95°F	K*H100E4S**	RST70C1E	9,780	8,660	7,650	6,710	5,860	5,070	–
	K*H125E4S**	RST97C1E	13,350	11,890	10,560	9,340	8,210	7,160	–
100°F	K*H100E4S**	RST70C1E	9,410	8,330	7,360	6,460	5,620	–	–
	K*H125E4S**	RST97C1E	12,860	11,460	10,170	8,990	7,890	–	–
110°F	K*H100E4S**	RST70C1E	8,690	7,680	6,770	5,930	5,160	–	–
	K*H125E4S**	RST97C1E	11,300	10,420	9,410	8,290	7,260	–	–

K*H055E4S, K*H080E4S, K*H150E4S**, K*H200E4S**, K*H250E4S**, K*H300E4S** and K*H325E4S** are not available for use with R407C.

Capacity Data (BTUH) - Extended Medium Temperature R448A, R449A Hermetic - 60 Hz‡

SUCTION TEMPERATURE

AMBIENT TEMPERATURE	MODEL	COMP. MODEL	30°F	25°F	20°F	15°F	10°F	5°F	0°F
90°F	K*H055E4S**	RST45C1E	6,890	6,060	5,310	4,640	4,030	3,480	3,000
	K*H080E4S**	RST55C1E	8,550	7,460	6,480	5,590	4,800	4,100	3,490
	K*H100E4S**	RST70C1E	9,970	8,940	7,990	7,080	6,240	5,450	4,720
	K*H125E4S**	RST97C1E	13,460	12,240	11,060	9,930	8,860	7,840	6,870
95°F	K*H055E4S**	RST45C1E	6,600	5,800	5,080	4,420	3,840	3,320	2,850
	K*H080E4S**	RST55C1E	8,160	7,120	6,160	5,300	4,540	3,870	3,290
	K*H100E4S**	RST70C1E	9,600	8,600	7,680	6,810	5,990	5,230	4,520
	K*H125E4S**	RST97C1E	12,990	11,790	10,650	9,550	8,500	7,510	6,570
100°F	K*H055E4S**	RST45C1E	6,300	5,540	4,840	4,220	3,650	3,150	2,700
	K*H080E4S**	RST55C1E	7,800	6,780	5,860	5,030	4,300	3,650	3,100
	K*H100E4S**	RST70C1E	9,230	8,280	7,380	6,540	5,740	5,000	4,310
	K*H125E4S**	RST97C1E	12,520	11,360	10,250	9,180	8,150	7,180	6,260
110°F	K*H055E4S**	RST45C1E	5,740	5,040	4,390	3,810	3,290	–	–
	K*H080E4S**	RST55C1E	7,100	6,170	5,310	4,550	3,860	–	–
	K*H100E4S**	RST70C1E	8,520	7,620	6,790	5,990	5,250	–	–
	K*H125E4S**	RST97C1E	11,620	10,510	9,450	8,430	7,460	–	–

* Each asterisk represents a variable character based upon model, voltage, and vintage ordered. See page 5 for nomenclature.

‡ Multiply capacity by .83 when used with 50 Hz power.

Capacity Data (BTUH) - Extended Medium Temperature R404A Scroll - 60 Hz‡

SUCTION TEMPERATURE

AMBIENT TEMPERATURE

	MODEL	COMP. MODEL	45°F	35°F	25°F	20°F	0°F	-10°F	-20°F
90°F	K*O060M4S**^	ZB06KAE	11,130	9,070	7,350	6,600	4,150	–	–
	K*O080M4S**^	ZB07KAE	13,770	11,230	9,100	8,170	5,130	–	–
	K*O100M4S**^	ZB08KAE	15,730	12,830	10,400	9,340	5,870	–	–
	K*O130E4S**	ZS09KAE	15,160	13,430	11,130	10,110	6,690	5,330	4,210
	K*O150E4S**	ZS11KAE	20,650	17,210	14,270	12,910	8,410	6,670	5,230
	K*O180E4S**	ZS13KAE	22,860	19,050	15,990	14,490	9,500	7,560	5,950
	K*O200E4S**	ZS15KAE	29,910	24,810	20,050	18,100	11,660	9,230	7,240
	K*O250E4S**	ZS19KAE	33,590	27,960	21,960	19,880	12,930	10,250	8,050
	K*O280E4S**	ZS20KAE	38,050	31,750	26,280	23,820	15,630	12,320	9,280
	K*O300E4S**	ZS21KAE	43,440	36,150	30,480	27,480	17,700	13,980	10,940
	K*O350E4S**	ZS26KAE	48,350	40,330	33,600	30,320	19,590	15,520	12,150
	K*O400E4S**	ZS29KAE	54,010	45,140	37,710	34,070	22,120	17,560	13,790
	K*O450E4S**	ZS33KAE	60,720	50,610	42,490	38,310	24,660	19,460	15,220
	K*O500E4S**	ZS38K4E	68,320	56,840	46,660	42,420	28,260	22,680	17,950
	K*O600E4S**	ZS45K4E	80,860	67,300	55,630	50,700	34,240	27,730	22,150
95°F	K*O060M4S**^	ZB06KAE	10,570	8,630	7,010	6,290	3,940	–	–
	K*O080M4S**^	ZB07KAE	13,080	10,680	8,670	7,790	4,870	–	–
	K*O100M4S**^	ZB08KAE	14,950	12,210	9,910	8,900	5,580	–	–
	K*O130E4S**	ZS09KAE	14,500	12,850	10,640	9,670	6,400	5,110	4,040
	K*O150E4S**	ZS11KAE	19,800	16,500	13,690	12,380	8,060	6,400	5,030
	K*O180E4S**	ZS13KAE	21,900	18,250	15,320	13,880	9,100	7,250	5,710
	K*O200E4S**	ZS15KAE	28,700	23,800	19,230	17,350	11,190	8,860	6,950
	K*O250E4S**	ZS19KAE	32,200	26,800	21,060	19,060	12,400	9,830	7,730
	K*O280E4S**	ZS20KAE	36,460	30,430	25,180	22,810	14,940	11,760	8,810
	K*O300E4S**	ZS21KAE	41,700	34,700	29,260	26,370	16,970	13,410	10,500
	K*O350E4S**	ZS26KAE	46,400	38,700	32,240	29,080	18,790	14,890	11,670
	K*O400E4S**	ZS29KAE	51,800	43,300	36,160	32,670	21,210	16,840	13,240
	K*O450E4S**	ZS33KAE	58,300	48,600	40,790	36,760	23,650	18,670	14,620
	K*O500E4S**	ZS38K4E	65,500	54,500	44,710	40,630	27,030	21,700	17,190
	K*O600E4S**	ZS45K4E	77,500	64,500	53,280	48,530	32,730	26,520	21,230
100°F	K*O060M4S**^	ZB06KAE	–	8,200	6,670	5,990	3,740	–	–
	K*O080M4S**^	ZB07KAE	–	10,150	8,250	7,420	4,630	–	–
	K*O100M4S**^	ZB08KAE	–	11,600	9,430	8,480	5,300	–	–
	K*O130E4S**	ZS09KAE	–	12,260	10,150	9,220	6,110	4,880	3,860
	K*O150E4S**	ZS11KAE	–	15,780	13,080	11,830	7,710	6,120	4,810
	K*O180E4S**	ZS13KAE	–	17,430	14,640	13,260	8,690	6,930	5,470
	K*O200E4S**	ZS15KAE	–	22,760	18,400	16,600	10,700	8,480	6,660
	K*O250E4S**	ZS19KAE	–	25,630	20,130	18,220	11,860	9,410	7,400
	K*O280E4S**	ZS20KAE	–	29,080	24,050	21,800	14,250	11,200	8,350
	K*O300E4S**	ZS21KAE	–	33,220	28,000	25,240	16,230	12,830	10,060
	K*O350E4S**	ZS26KAE	–	37,050	30,850	27,830	17,970	14,240	11,180
	K*O400E4S**	ZS29KAE	–	41,420	34,580	31,240	20,270	16,110	12,680
	K*O450E4S**	ZS33KAE	–	46,540	39,050	35,190	22,630	17,870	14,010
	K*O500E4S**	ZS38K4E	–	52,120	42,740	38,820	25,790	20,700	16,410
	K*O600E4S**	ZS45K4E	–	61,650	50,900	46,350	31,220	25,300	20,290
110°F	K*O060M4S**^	ZB06KAE	–	7,400	6,050	5,450	3,400	–	–
	K*O080M4S**^	ZB07KAE	–	9,150	7,480	6,740	4,210	–	–
	K*O100M4S**^	ZB08KAE	–	10,470	8,560	7,720	4,820	–	–
	K*O130E4S**	ZS09KAE	–	–	9,120	8,290	5,500	4,390	3,480
	K*O150E4S**	ZS11KAE	–	13,660	11,840	10,700	6,960	5,540	4,370
	K*O180E4S**	ZS13KAE	–	15,030	13,220	11,970	7,840	6,260	4,950
	K*O200E4S**	ZS15KAE	–	19,740	16,680	15,040	9,700	7,680	6,050
	K*O250E4S**	ZS19KAE	–	22,200	18,220	16,480	10,720	8,510	6,710
	K*O280E4S**	ZS20KAE	–	26,380	21,760	19,730	12,860	10,080	7,490
	K*O300E4S**	ZS21KAE	–	28,890	25,420	22,890	14,700	11,630	9,140
	K*O350E4S**	ZS26KAE	–	32,190	27,990	25,220	16,260	12,890	10,140
	K*O400E4S**	ZS29KAE	–	35,910	31,330	28,280	18,330	14,560	11,500
	K*O450E4S**	ZS33KAE	–	40,500	35,450	31,930	20,490	16,200	12,720
	K*O500E4S**	ZS38K4E	–	45,230	38,740	35,140	23,240	18,630	14,770
	K*O600E4S**	ZS45K4E	–	53,410	46,090	41,930	28,140	22,810	18,340

* Each asterisk represents a variable character based upon model, voltage, and vintage ordered. See page 5 for nomenclature.

‡ Multiply capacity by .83 when used with 50 Hz power. ^ Model available in medium temperature range only.

Capacity Data (BTUH) - Extended Medium Temperature R407A Scroll - 60 Hz‡

SUCTION TEMPERATURE

AMBIENT TEMPERATURE	MODEL	COMP. MODEL	45°F	35°F	30°F	25°F	20°F	0°F	-5°F	-10°F
90°F	K*O060M4S**^	ZB06KAE	10,370	8,400	7,540	6,740	6,010	3,620	–	–
	K*O080M4S**^	ZB07KAE	12,640	10,240	9,190	8,220	7,330	4,410	–	–
	K*O100M4S**^	ZB08KAE	14,790	11,980	10,750	9,610	8,570	5,160	–	–
	K*O130E4S**	ZS09KAE	16,150	13,120	11,650	10,590	9,610	6,380	5,700	5,070
	K*O150E4S**	ZS11KAE	19,970	16,220	14,570	13,210	11,960	7,850	7,000	6,210
	K*O180E4S**	ZS13KAE	22,440	18,270	16,420	14,900	13,510	8,920	7,960	7,070
	K*O200E4S**	ZS15KAE	27,410	22,310	20,240	18,320	16,560	10,850	9,680	8,580
	K*O250E4S**	ZS19KAE	30,560	24,830	22,610	20,490	18,540	12,180	10,870	9,640
	K*O280E4S**	ZS20KAE	36,640	30,210	27,330	24,600	22,140	14,080	12,470	11,000
	K*O300E4S**	ZS21KAE	41,460	33,750	30,570	27,640	24,960	16,290	14,520	12,860
	K*O350E4S**	ZS26KAE	46,680	37,930	33,770	30,560	27,620	18,060	16,110	14,270
	K*O400E4S**	ZS29KAE	51,300	41,700	37,530	33,990	30,740	20,160	17,990	15,950
	K*O450E4S**	ZS33KAE	59,050	48,010	43,300	39,160	35,350	23,070	20,560	18,220
	K*O500E4S**	ZS38K4E	62,790	52,670	48,900	44,200	39,700	25,620	22,960	20,430
	K*O600E4S**	ZS45K4E	71,990	59,580	51,310	47,590	43,900	29,890	26,730	23,770
95°F	K*O060M4S**^	ZB06KAE	10,010	8,110	7,270	6,500	5,790	3,440	–	–
	K*O080M4S**^	ZB07KAE	12,210	9,890	8,870	7,930	7,070	4,200	–	–
	K*O100M4S**^	ZB08KAE	14,280	11,570	10,370	9,270	8,260	4,910	–	–
	K*O130E4S**	ZS09KAE	15,450	12,550	11,230	10,220	9,270	6,140	5,490	4,880
	K*O150E4S**	ZS11KAE	19,150	15,550	14,070	12,750	11,540	7,560	6,740	5,970
	K*O180E4S**	ZS13KAE	21,500	17,500	15,850	14,390	13,040	8,590	7,670	6,800
	K*O200E4S**	ZS15KAE	26,300	21,400	19,560	17,700	15,990	10,460	9,330	8,260
	K*O250E4S**	ZS19KAE	29,300	23,800	21,850	19,800	17,900	11,740	10,470	9,280
	K*O280E4S**	ZS20KAE	35,450	29,210	26,460	23,840	21,430	13,590	12,040	10,630
	K*O300E4S**	ZS21KAE	39,800	32,400	29,550	26,710	24,110	15,700	13,990	12,380
	K*O350E4S**	ZS26KAE	44,800	36,400	32,640	29,520	26,670	17,410	15,510	13,740
	K*O400E4S**	ZS29KAE	49,200	40,000	36,260	32,840	29,680	19,430	17,330	15,360
	K*O450E4S**	ZS33KAE	56,700	46,100	41,850	37,840	34,150	22,240	19,810	17,540
	K*O500E4S**	ZS38K4E	60,200	50,500	47,200	42,600	38,200	24,900	22,300	19,830
	K*O600E4S**	ZS45K4E	69,000	57,100	50,080	46,430	42,810	29,100	26,010	23,120
100°F	K*O060M4S**^	ZB06KAE	–	7,820	7,010	6,260	5,570	3,260	–	–
	K*O080M4S**^	ZB07KAE	–	9,540	8,550	7,640	6,800	3,980	–	–
	K*O100M4S**^	ZB08KAE	–	11,150	10,000	8,930	7,940	4,650	–	–
	K*O130E4S**	ZS09KAE	–	11,970	10,820	9,850	8,930	5,910	5,280	4,680
	K*O150E4S**	ZS11KAE	–	14,870	13,560	12,290	11,120	7,270	6,480	5,740
	K*O180E4S**	ZS13KAE	–	16,710	15,280	13,860	12,560	8,270	7,370	6,530
	K*O200E4S**	ZS15KAE	–	20,460	18,880	17,080	15,420	10,070	8,970	7,940
	K*O250E4S**	ZS19KAE	–	22,760	21,080	19,100	17,260	11,300	10,080	8,920
	K*O280E4S**	ZS20KAE	–	28,210	25,510	22,930	20,640	13,100	11,610	10,260
	K*O300E4S**	ZS21KAE	–	31,020	28,510	25,760	23,250	15,110	13,460	11,900
	K*O350E4S**	ZS26KAE	–	34,850	31,490	28,470	25,720	16,750	14,920	13,200
	K*O400E4S**	ZS29KAE	–	38,270	34,970	31,660	28,610	18,710	16,670	14,760
	K*O450E4S**	ZS33KAE	–	44,150	40,390	36,500	32,940	21,400	19,050	16,860
	K*O500E4S**	ZS38K4E	–	48,300	45,600	41,100	36,800	24,150	21,620	19,220
	K*O600E4S**	ZS45K4E	–	54,580	48,840	45,270	41,720	28,310	25,280	22,450
110°F	K*O060M4S**^	ZB06KAE	–	7,230	6,470	5,760	5,110	2,860	–	–
	K*O080M4S**^	ZB07KAE	–	8,810	7,890	7,030	6,230	3,490	–	–
	K*O100M4S**^	ZB08KAE	–	10,300	9,220	8,210	7,280	4,080	–	–
	K*O130E4S**	ZS09KAE	–	–	9,990	9,090	8,250	5,440	–	–
	K*O150E4S**	ZS11KAE	–	12,870	12,540	11,360	10,270	6,700	–	–
	K*O180E4S**	ZS13KAE	–	14,410	14,120	12,810	11,600	7,620	–	–
	K*O200E4S**	ZS15KAE	–	17,750	17,490	15,810	14,270	9,280	–	–
	K*O250E4S**	ZS19KAE	–	19,710	19,530	17,690	15,980	10,430	–	–
	K*O280E4S**	ZS20KAE	–	26,180	23,660	21,250	19,130	12,150	–	–
	K*O300E4S**	ZS21KAE	–	26,980	26,420	23,850	21,510	13,930	–	–
	K*O350E4S**	ZS26KAE	–	30,270	29,160	26,350	23,780	15,440	–	–
	K*O400E4S**	ZS29KAE	–	33,180	32,370	29,290	26,460	17,250	–	–
	K*O450E4S**	ZS33KAE	–	38,420	37,420	33,790	30,480	19,730	–	–
	K*O500E4S**	ZS38K4E	–	44,190	43,900	39,500	35,300	22,640	–	–
	K*O600E4S**	ZS45K4E	–	47,280	46,310	42,880	39,480	26,670	–	–

* Each asterisk represents a variable character based upon model, voltage, and vintage ordered. See page 5 for nomenclature.

‡ Multiply capacity by .83 when used with 50 Hz power. ^ Model available in medium temperature range only.

20° F Superheat Maximum

Capacity Data (BTUH) - Extended Medium Temperature R407C Scroll - 60 Hz‡

SUCTION TEMPERATURE

AMBIENT TEMPERATURE	MODEL	COMP. MODEL	45°F	35°F	30°F	25°F	20°F	0°F	-5°F	-10°F
90°F	K*O060M4S**^	ZB06KAE	10,250	8,300	7,430	6,630	5,890	3,430	–	–
	K*O080M4S**^	ZB07KAE	12,200	9,930	8,900	7,950	7,070	4,170	–	–
	K*O100M4S**^	ZB08KAE	14,200	11,450	10,250	9,170	8,170	4,880	–	–
	K*O130E4S**	ZS09KAE	15,350	12,700	11,150	10,120	9,130	5,520	4,690	3,890
	K*O150E4S**	ZS11KAE	18,980	15,700	13,950	12,630	11,360	6,790	5,760	4,760
	K*O180E4S**	ZS13KAE	21,330	17,680	15,720	14,240	12,840	7,720	6,550	5,420
	K*O200E4S**	ZS15KAE	26,050	21,590	19,380	17,510	15,740	9,390	7,960	6,580
	K*O250E4S**	ZS19KAE	29,050	24,030	21,650	19,590	17,620	10,540	8,940	7,390
	K*O280E4S**	ZS20KAE	33,430	27,520	24,880	22,390	20,140	12,740	11,270	9,930
	K*O300E4S**	ZS21KAE	40,110	33,250	29,790	26,900	24,140	14,350	12,150	10,030
	K*O350E4S**	ZS26KAE	44,680	36,840	32,550	29,520	26,660	16,460	14,090	11,720
	K*O400E4S**	ZS29KAE	49,540	41,010	36,510	33,020	29,680	17,730	15,030	12,420
	K*O450E4S**	ZS33KAE	55,630	46,060	41,100	37,110	33,300	19,790	16,760	13,840
	K*O500E4S**	ZS38K4E	62,630	52,540	48,780	44,090	39,600	25,560	22,900	20,380
	K*O600E4S**	ZS45K4E	71,810	59,430	51,180	47,470	43,790	29,820	26,660	23,710
95°F	K*O060M4S**^	ZB06KAE	9,910	8,020	7,180	6,400	5,690	3,300	–	–
	K*O080M4S**^	ZB07KAE	11,750	9,580	8,590	7,670	6,820	4,010	–	–
	K*O100M4S**^	ZB08KAE	13,650	11,050	9,880	8,830	7,880	4,690	–	–
	K*O130E4S**	ZS09KAE	14,770	12,240	10,830	9,850	8,880	5,330	4,500	3,700
	K*O150E4S**	ZS11KAE	18,300	15,170	13,560	12,280	11,060	6,560	5,530	4,530
	K*O180E4S**	ZS13KAE	20,550	17,070	15,280	13,860	12,490	7,450	6,290	5,150
	K*O200E4S**	ZS15KAE	25,140	20,880	18,860	17,050	15,320	9,080	7,650	6,260
	K*O250E4S**	ZS19KAE	28,010	23,220	21,060	19,080	17,150	10,190	8,590	7,030
	K*O280E4S**	ZS20KAE	32,400	26,670	24,100	21,680	19,510	12,400	10,910	9,610
	K*O300E4S**	ZS21KAE	38,720	32,180	29,000	26,190	23,510	13,870	11,680	9,550
	K*O350E4S**	ZS26KAE	43,110	35,610	31,650	28,700	25,920	15,880	13,510	11,150
	K*O400E4S**	ZS29KAE	47,790	39,660	35,520	32,150	28,900	17,130	14,440	11,830
	K*O450E4S**	ZS33KAE	53,730	44,590	40,000	36,140	32,430	19,130	16,110	13,180
	K*O500E4S**	ZS38K4E	60,050	50,370	47,080	42,490	38,110	24,840	22,240	19,780
	K*O600E4S**	ZS45K4E	68,830	56,960	49,960	46,310	42,700	29,030	25,950	23,060
100°F	K*O060M4S**^	ZB06KAE	–	7,740	6,930	6,180	5,490	3,170	–	–
	K*O080M4S**^	ZB07KAE	–	9,230	8,280	7,400	6,580	3,850	–	–
	K*O100M4S**^	ZB08KAE	–	10,780	9,680	8,660	7,690	4,500	–	–
	K*O130E4S**	ZS09KAE	–	11,680	10,520	9,570	8,630	5,130	4,300	3,490
	K*O150E4S**	ZS11KAE	–	14,510	13,180	11,940	10,750	6,310	5,280	4,280
	K*O180E4S**	ZS13KAE	–	16,300	14,850	13,470	12,140	7,180	6,010	4,860
	K*O200E4S**	ZS15KAE	–	19,970	18,350	16,600	14,900	8,740	7,310	5,910
	K*O250E4S**	ZS19KAE	–	22,210	20,490	18,560	16,680	9,810	8,210	6,640
	K*O280E4S**	ZS20KAE	–	25,810	23,350	20,980	18,880	11,940	10,570	9,300
	K*O300E4S**	ZS21KAE	–	30,800	28,200	25,480	22,870	13,350	11,170	9,020
	K*O350E4S**	ZS26KAE	–	34,090	30,740	27,880	25,170	15,270	12,900	10,520
	K*O400E4S**	ZS29KAE	–	37,940	34,540	31,260	28,100	16,500	13,810	11,170
	K*O450E4S**	ZS33KAE	–	42,700	38,910	35,160	31,560	18,410	15,390	12,450
	K*O500E4S**	ZS38K4E	–	48,180	45,490	41,000	36,710	24,090	21,570	19,170
	K*O600E4S**	ZS45K4E	–	54,440	48,720	45,160	41,620	28,240	25,220	22,390
110°F	K*O060M4S**^	ZB06KAE	–	7,180	6,430	5,740	5,090	2,900	–	–
	K*O080M4S**^	ZB07KAE	–	8,540	7,670	6,860	6,110	3,540	–	–
	K*O100M4S**^	ZB08KAE	–	9,990	8,970	8,020	7,140	4,140	–	–
	K*O130E4S**	ZS09KAE	–	–	9,890	9,000	8,120	4,670	–	–
	K*O150E4S**	ZS11KAE	–	12,110	12,410	11,250	10,110	5,760	–	–
	K*O180E4S**	ZS13KAE	–	13,550	13,980	12,690	11,420	6,550	–	–
	K*O200E4S**	ZS15KAE	–	16,690	17,320	15,660	14,040	7,970	–	–
	K*O250E4S**	ZS19KAE	–	18,460	19,330	17,520	15,730	8,960	–	–
	K*O280E4S**	ZS20KAE	–	24,100	21,770	19,570	17,620	11,140	–	–
	K*O300E4S**	ZS21KAE	–	28,560	26,620	24,040	21,550	12,180	–	–
	K*O350E4S**	ZS26KAE	–	29,720	28,950	26,240	23,650	13,960	–	–
	K*O400E4S**	ZS29KAE	–	35,720	32,560	29,480	26,460	15,060	–	–
	K*O450E4S**	ZS33KAE	–	39,180	36,720	33,170	29,730	16,810	–	–
	K*O500E4S**	ZS38K4E	–	44,180	43,790	39,400	35,210	22,580	–	–
	K*O600E4S**	ZS45K4E	–	46,430	46,200	42,770	39,380	26,600	–	–

* Each asterisk represents a variable character based upon model, voltage, and vintage ordered. See page 5 for nomenclature.

‡ Multiply capacity by .83 when used with 50 Hz power. ^ Model available in medium temperature range only.

20° F Superheat Maximum

Capacity Data (BTUH) - Extended Medium Temperature R448A, R449A Scroll - 60 Hz‡

SUCTION TEMPERATURE

AMBIENT TEMPERATURE	MODEL	COMP. MODEL	45°F	35°F	30°F	25°F	20°F	0°F	-5°F	-10°F
90°F	K*O060M4S**^	ZB06KAE	10,450	8,490	7,620	6,830	6,090	3,680	–	–
	K*O080M4S**^	ZB07KAE	12,750	10,360	9,300	8,330	7,430	4,490	–	–
	K*O100M4S**^	ZB08KAE	14,910	12,110	10,880	9,740	8,690	5,250	–	–
	K*O130E4S**	ZS09KAE	15,870	12,600	11,100	10,030	9,070	6,000	5,340	4,710
	K*O150E4S**	ZS11KAE	19,740	15,670	13,960	12,580	11,350	7,420	6,600	5,800
	K*O180E4S**	ZS13KAE	22,150	17,630	15,710	14,180	12,810	8,430	7,490	6,600
	K*O200E4S**	ZS15KAE	27,060	21,530	19,370	17,440	15,700	10,250	9,120	8,010
	K*O250E4S**	ZS19KAE	30,050	23,870	21,560	19,430	17,510	11,470	10,200	8,970
	K*O280E4S**	ZS20KAE	36,770	30,440	27,600	24,950	22,460	14,400	12,790	11,310
	K*O300E4S**	ZS21KAE	42,610	35,180	31,920	28,900	26,060	16,400	14,380	12,500
	K*O350E4S**	ZS26KAE	47,490	38,490	34,140	30,840	27,810	18,070	16,200	14,140
	K*O400E4S**	ZS29KAE	53,710	44,280	39,920	36,200	32,690	20,680	18,150	15,800
	K*O450E4S**	ZS33KAE	60,040	49,500	44,720	40,500	36,510	22,980	20,150	17,520
	K*O500E4S**	ZS38K4E	64,350	53,630	49,760	45,040	40,590	27,180	24,660	22,230
	K*O600E4S**	ZS45K4E	73,700	60,600	52,450	48,680	45,020	31,600	28,610	25,790
95°F	K*O060M4S**^	ZB06KAE	10,080	8,190	7,350	6,580	5,860	3,500	–	–
	K*O080M4S**^	ZB07KAE	12,300	9,990	8,960	8,020	7,150	4,270	–	–
	K*O100M4S**^	ZB08KAE	14,380	11,680	10,480	9,380	8,360	4,990	–	–
	K*O130E4S**	ZS09KAE	15,210	12,050	10,700	9,680	8,750	5,820	5,210	4,630
	K*O150E4S**	ZS11KAE	18,960	15,020	13,480	12,140	10,950	7,210	6,440	5,690
	K*O180E4S**	ZS13KAE	21,260	16,880	15,170	13,690	12,360	8,180	7,320	6,480
	K*O200E4S**	ZS15KAE	26,020	20,650	18,730	16,840	15,160	9,960	8,910	7,870
	K*O250E4S**	ZS19KAE	28,880	22,880	20,840	18,770	16,900	11,140	9,950	8,810
	K*O280E4S**	ZS20KAE	35,570	29,420	26,680	24,100	21,720	13,920	12,530	10,930
	K*O300E4S**	ZS21KAE	40,980	33,840	30,910	27,960	25,190	15,690	13,700	11,830
	K*O350E4S**	ZS26KAE	45,770	36,940	33,020	29,760	26,770	17,270	15,460	13,370
	K*O400E4S**	ZS29KAE	51,620	42,560	38,640	35,030	31,590	19,790	17,290	14,950
	K*O450E4S**	ZS33KAE	57,760	47,620	43,310	39,190	35,290	21,990	19,190	16,580
	K*O500E4S**	ZS38K4E	61,270	51,090	47,730	43,160	38,850	26,370	23,930	21,570
	K*O600E4S**	ZS45K4E	70,140	57,700	50,910	47,250	43,700	30,710	27,810	25,080
100°F	K*O060M4S**^	ZB06KAE	–	7,880	7,070	6,320	5,630	3,310	–	–
	K*O080M4S**^	ZB07KAE	–	9,620	8,630	7,710	6,870	4,040	–	–
	K*O100M4S**^	ZB08KAE	–	11,240	10,090	9,020	8,030	4,720	–	–
	K*O130E4S**	ZS09KAE	–	11,460	10,290	9,310	8,400	5,630	5,070	4,520
	K*O150E4S**	ZS11KAE	–	14,320	12,970	11,680	10,530	6,970	6,250	5,570
	K*O180E4S**	ZS13KAE	–	16,080	14,600	13,150	11,870	7,920	7,110	6,330
	K*O200E4S**	ZS15KAE	–	19,690	18,050	16,220	14,580	9,640	8,650	7,700
	K*O250E4S**	ZS19KAE	–	21,820	20,070	18,060	16,260	10,780	9,680	8,620
	K*O280E4S**	ZS20KAE	–	28,400	25,750	23,270	20,940	13,430	11,920	10,540
	K*O300E4S**	ZS21KAE	–	32,440	29,870	26,990	24,280	14,940	12,960	11,100
	K*O350E4S**	ZS26KAE	–	35,230	31,790	28,560	25,620	16,350	14,620	12,550
	K*O400E4S**	ZS29KAE	–	40,770	37,330	33,800	30,440	18,840	16,360	14,030
	K*O450E4S**	ZS33KAE	–	45,680	41,860	37,840	34,030	20,920	18,150	15,560
	K*O500E4S**	ZS38K4E	–	48,490	45,780	41,340	37,180	25,500	23,140	20,870
	K*O600E4S**	ZS45K4E	–	54,730	49,330	45,790	42,350	29,790	26,980	24,330
110°F	K*O060M4S**^	ZB06KAE	–	7,260	6,500	5,800	5,140	2,910	–	–
	K*O080M4S**^	ZB07KAE	–	8,860	7,930	7,070	6,270	3,550	–	–
	K*O100M4S**^	ZB08KAE	–	10,360	9,270	8,270	7,330	4,150	–	–
	K*O130E4S**	ZS09KAE	–	–	9,390	8,460	7,640	5,160	–	–
	K*O150E4S**	ZS11KAE	–	12,180	11,850	10,630	9,560	6,390	–	–
	K*O180E4S**	ZS13KAE	–	13,630	13,330	11,980	10,790	7,250	–	–
	K*O200E4S**	ZS15KAE	–	16,790	16,510	14,790	13,270	8,840	–	–
	K*O250E4S**	ZS19KAE	–	18,570	18,370	16,480	14,800	9,890	–	–
	K*O280E4S**	ZS20KAE	–	26,360	23,870	21,570	19,380	12,430	–	–
	K*O300E4S**	ZS21KAE	–	28,220	27,700	24,950	22,340	13,250	–	–
	K*O350E4S**	ZS26KAE	–	29,840	28,860	25,710	22,850	14,040	–	–
	K*O400E4S**	ZS29KAE	–	35,360	34,570	31,210	28,000	16,710	–	–
	K*O450E4S**	ZS33KAE	–	39,760	38,810	34,960	31,320	18,560	–	–
	K*O500E4S**	ZS38K4E	–	42,350	41,920	36,460	34,000	23,650	–	–
	K*O600E4S**	ZS45K4E	–	46,550	46,050	42,720	39,510	27,820	–	–

* Each asterisk represents a variable character based upon model, voltage, and vintage ordered. See page 5 for nomenclature.

‡ Multiply capacity by .83 when used with 50 Hz power. ^ Model available in medium temperature range only.

20° F Superheat Maximum

Capacity Data (BTUH) - Low Temperature R404A Scroll - 60 Hz‡

SUCTION TEMPERATURE

AMBIENT TEMPERATURE

	MODEL	COMP. MODEL	0°F	-5°F	-10°F	-15°F	-20°F	-25°F	-30°F	-40°F
90°F	K*O100L4S**	ZF03KAE	4,950	4,330	3,780	3,310	2,900	2,550	2,240	1,770
	K*O130L4S**	ZF04KAE	6,850	5,990	5,220	4,530	3,920	3,390	2,940	2,260
	K*O160L4S**	ZF05KAE	8,200	7,240	6,360	5,570	4,850	4,200	3,630	2,720
	K*O230L4S**	ZF07KAE	12,800	11,300	9,980	8,780	7,710	6,730	5,830	4,160
	K*O250L4S**	ZF08K4E	14,770	13,290	11,910	10,640	9,470	8,390	7,400	5,670
	K*O300L4S**	ZF09K4E	16,190	14,610	13,130	11,760	10,500	9,320	8,240	6,290
	K*O350L4S**	ZF11K4E	19,400	17,560	15,830	14,190	12,670	11,260	9,950	7,630
	K*O400L4S**	ZF13K4E	23,970	21,490	19,190	17,060	15,080	13,260	11,590	8,720
	K*O500L4S**	ZF15K4E	28,630	25,820	23,200	20,770	18,520	16,450	14,530	11,150
	K*O600L4S**	ZF18K4E	32,720	29,530	26,560	23,790	21,220	18,850	16,660	12,760
95°F	K*O100L4S**	ZF03KAE	4,710	4,120	3,600	3,150	2,760	2,430	2,140	1,690
	K*O130L4S**	ZF04KAE	6,530	5,710	4,970	4,300	3,720	3,210	2,780	2,150
	K*O160L4S**	ZF05KAE	7,820	6,900	6,060	5,300	4,610	3,990	3,450	2,580
	K*O230L4S**	ZF07KAE	12,200	10,800	9,500	8,360	7,330	6,400	5,540	3,930
	K*O250L4S**	ZF08K4E	14,130	12,720	11,410	10,190	9,070	8,040	7,090	5,420
	K*O300L4S**	ZF09K4E	15,480	13,980	12,570	11,260	10,050	8,930	7,890	6,020
	K*O350L4S**	ZF11K4E	18,530	16,780	15,130	13,580	12,120	10,780	9,530	7,310
	K*O400L4S**	ZF13K4E	22,930	20,550	18,340	16,300	14,390	12,640	11,040	8,270
	K*O500L4S**	ZF15K4E	27,350	24,660	22,160	19,840	17,690	15,710	13,880	10,650
	K*O600L4S**	ZF18K4E	31,310	28,270	25,440	22,800	20,350	18,080	15,980	12,240
100°F	K*O100L4S**	ZF03KAE	4,480	3,910	3,410	2,990	2,620	2,310	2,040	1,610
	K*O130L4S**	ZF04KAE	6,210	5,420	4,710	4,070	3,520	3,040	2,630	2,040
	K*O160L4S**	ZF05KAE	7,450	6,570	5,760	5,020	4,360	3,770	3,260	2,430
	K*O230L4S**	ZF07KAE	11,160	10,250	9,010	7,930	6,950	6,060	5,240	3,690
	K*O250L4S**	ZF08K4E	13,490	12,140	10,890	9,730	8,660	7,670	6,760	5,160
	K*O300L4S**	ZF09K4E	14,760	13,340	11,990	10,750	9,590	8,520	7,530	5,740
	K*O350L4S**	ZF11K4E	17,650	15,980	14,410	12,940	11,560	10,280	9,090	6,980
	K*O400L4S**	ZF13K4E	21,860	19,590	17,480	15,520	13,700	12,020	10,480	7,830
	K*O500L4S**	ZF15K4E	26,040	23,480	21,100	18,890	16,850	14,960	13,220	10,150
	K*O600L4S**	ZF18K4E	29,890	27,000	24,300	21,790	19,450	17,290	15,280	11,710
110°F	K*O100L4S**	ZF03KAE	4,000	3,490	3,040	2,660	2,340	2,070	1,830	1,455
	K*O130L4S**	ZF04KAE	5,560	4,830	4,180	3,610	3,100	2,670	2,320	1,810
	K*O160L4S**	ZF05KAE	6,690	5,880	5,140	4,470	3,860	3,330	2,870	2,130
	K*O230L4S**	ZF07KAE	10,350	9,100	8,010	7,040	6,170	5,370	4,630	3,220
	K*O250L4S**	ZF08K4E	12,150	10,940	9,810	8,760	7,790	6,900	6,070	4,620
	K*O300L4S**	ZF09K4E	13,300	12,010	10,810	9,690	8,650	7,680	6,780	5,160
	K*O350L4S**	ZF11K4E	15,820	14,320	12,920	11,610	10,380	9,230	8,170	6,280
	K*O400L4S**	ZF13K4E	19,670	17,630	15,720	13,950	12,310	10,800	9,410	7,000
	K*O500L4S**	ZF15K4E	23,360	21,060	18,920	16,940	15,100	13,410	11,850	9,090
	K*O600L4S**	ZF18K4E	26,990	24,390	21,960	19,700	17,610	15,660	13,850	10,630

* Each asterisk represents a variable character based upon model, voltage, and vintage ordered. See page 5 for nomenclature.

‡ Multiply capacity by .83 when used with 50 Hz power.

Capacity Data (BTUH) - Low Temperature R407A Scroll - 60 Hz‡

SUCTION TEMPERATURE

AMBIENT TEMPERATURE

	MODEL	COMP. MODEL	0°F	-5°F	-10°F	-15°F	-20°F	-25°F	-30°F	-40°F
90°F	K*O100L4S**	ZF03KAE	4,170	3,670	3,240	2,860	2,530	2,240	1,990	1,560
	K*O130L4S**	ZF04KAE	5,880	5,130	4,450	3,850	3,320	2,870	2,490	1,955
	K*O160L4S**	ZF05KAE	6,980	6,100	5,300	4,590	3,950	3,390	2,920	2,210
	K*O230L4S**	ZF07KAE	10,800	9,550	8,430	7,430	6,530	5,710	4,960	3,570
	K*O250L4S**	ZF08K4E	12,820	11,450	10,170	8,990	7,900	6,910	6,000	4,470
	K*O300L4S**	ZF09K4E	14,170	12,830	11,470	10,140	8,870	7,710	6,690	5,190
	K*O350L4S**	ZF11K4E	17,510	15,880	14,210	12,560	10,990	9,530	8,260	6,410
	K*O400L4S**	ZF13K4E	20,980	18,640	16,440	14,390	12,520	10,860	9,440	7,450
	K*O500L4S**	ZF15K4E	25,620	22,750	20,070	17,620	15,420	13,480	11,830	9,490
	K*O600L4S**	ZF18K4E	30,490	27,200	24,110	21,220	18,600	16,270	14,260	11,320
95°F	K*O100L4S**	ZF03KAE	4,000	3,530	3,120	2,760	2,440	2,160	1,920	1,495
	K*O130L4S**	ZF04KAE	5,640	4,910	4,260	3,690	3,180	2,750	2,390	1,885
	K*O160L4S**	ZF05KAE	6,700	5,850	5,080	4,390	3,780	3,250	2,790	2,130
	K*O230L4S**	ZF07KAE	10,400	9,170	8,090	7,130	6,260	5,480	4,750	3,400
	K*O250L4S**	ZF08K4E	12,390	11,060	9,830	8,690	7,630	6,670	5,790	4,300
	K*O300L4S**	ZF09K4E	13,700	12,410	11,110	9,820	8,590	7,460	6,460	4,990
	K*O350L4S**	ZF11K4E	16,920	15,360	13,750	12,160	10,630	9,220	7,980	6,170
	K*O400L4S**	ZF13K4E	20,300	18,000	15,830	13,830	12,020	10,420	9,070	7,210
	K*O500L4S**	ZF15K4E	24,790	21,990	19,370	16,980	14,830	12,960	11,370	9,130
	K*O600L4S**	ZF18K4E	29,540	26,330	23,310	20,500	17,950	15,690	13,750	10,930
100°F	K*O100L4S**	ZF03KAE	3,840	3,390	3,000	2,660	2,360	2,090	1,855	1,440
	K*O130L4S**	ZF04KAE	5,390	4,700	4,070	3,520	3,030	2,620	2,280	1,810
	K*O160L4S**	ZF05KAE	6,410	5,590	4,850	4,190	3,600	3,100	2,670	2,050
	K*O230L4S**	ZF07KAE	9,930	8,770	7,730	6,810	5,980	5,230	4,530	3,220
	K*O250L4S**	ZF08K4E	11,940	10,660	9,470	8,370	7,350	6,420	5,570	4,130
	K*O300L4S**	ZF09K4E	13,240	12,000	10,740	9,500	8,310	7,220	6,240	4,800
	K*O350L4S**	ZF11K4E	16,330	14,830	13,290	11,750	10,280	8,920	7,710	5,930
	K*O400L4S**	ZF13K4E	19,610	17,340	15,220	13,270	11,510	9,980	8,690	6,960
	K*O500L4S**	ZF15K4E	23,950	21,200	18,650	16,320	14,230	12,410	10,880	8,740
	K*O600L4S**	ZF18K4E	28,580	25,440	22,500	19,770	17,290	15,100	13,230	10,530
110°F	K*O100L4S**	ZF03KAE	3,540	3,140	2,790	2,490	2,210	1,970	1,750	1,340
	K*O130L4S**	ZF04KAE	4,890	4,250	3,680	3,170	2,740	2,370	2,070	1,660
	K*O160L4S**	ZF05KAE	5,840	5,080	4,390	3,790	3,250	2,800	2,420	1,885
	K*O230L4S**	ZF07KAE	8,980	7,920	6,970	6,130	5,370	4,680	4,040	2,800
	K*O250L4S**	ZF08K4E	11,010	9,840	8,730	7,710	6,770	5,900	5,120	3,770
	K*O300L4S**	ZF09K4E	12,310	11,180	10,020	8,870	7,770	6,740	5,820	4,430
	K*O350L4S**	ZF11K4E	15,130	13,760	12,350	10,940	9,580	8,310	7,170	5,480
	K*O400L4S**	ZF13K4E	18,150	15,970	13,950	12,110	10,470	9,060	7,900	6,430
	K*O500L4S**	ZF15K4E	22,180	19,570	17,140	14,930	12,970	11,260	9,840	7,890
	K*O600L4S**	ZF18K4E	26,600	23,620	20,830	18,260	15,930	13,870	12,130	9,650

* Each asterisk represents a variable character based upon model, voltage, and vintage ordered. See page 5 for nomenclature.

‡ Multiply capacity by .83 when used with 50 Hz power.

Capacity Data (BTUH) - Low Temperature R407C Scroll - 60 Hz‡

SUCTION TEMPERATURE

AMBIENT TEMPERATURE	MODEL	COMP. MODEL	0°F	-5°F	-10°F	-15°F	-20°F	-25°F	-30°F	-40°F
90°F	K*O100L4S**	ZF03KAE	3,940	3,470	3,060	2,710	2,400	2,130	1,910	1,540
	K*O130L4S**	ZF04KAE	5,480	4,790	4,160	3,600	3,110	2,690	2,340	1,850
	K*O160L4S**	ZF05KAE	6,540	5,720	4,980	4,310	3,720	3,200	2,750	2,080
	K*O230L4S**	ZF07KAE	9,930	8,710	7,680	6,800	6,020	5,320	4,650	3,230
	K*O250L4S**	ZF08K4E	12,220	10,850	9,610	8,490	7,460	6,530	5,670	4,170
	K*O300L4S**	ZF09K4E	13,500	12,160	10,840	9,570	8,380	7,290	6,320	4,840
	K*O350L4S**	ZF11K4E	16,600	15,020	13,420	11,840	10,340	8,950	7,750	6,040
	K*O400L4S**	ZF13K4E	19,620	17,420	15,330	13,390	11,610	10,040	8,700	6,890
	K*O500L4S**	ZF15K4E	23,910	21,270	18,760	16,440	14,340	12,480	10,910	8,770
	K*O600L4S**	ZF18K4E	28,450	25,410	22,510	19,780	17,290	15,080	13,190	10,530
95°F	K*O100L4S**	ZF03KAE	3,790	3,340	2,950	2,610	2,320	2,060	1,840	1,480
	K*O130L4S**	ZF04KAE	5,280	4,610	4,000	3,460	3,000	2,590	2,260	1,800
	K*O160L4S**	ZF05KAE	6,300	5,510	4,790	4,150	3,580	3,080	2,650	2,020
	K*O230L4S**	ZF07KAE	9,560	8,390	7,400	6,550	5,810	5,140	4,480	3,090
	K*O250L4S**	ZF08K4E	11,810	10,490	9,300	8,210	7,210	6,310	5,480	4,010
	K*O300L4S**	ZF09K4E	13,060	11,770	10,510	9,280	8,120	7,060	6,110	4,660
	K*O350L4S**	ZF11K4E	16,050	14,540	12,990	11,470	10,010	8,670	7,490	5,820
	K*O400L4S**	ZF13K4E	19,000	16,830	14,770	12,870	11,150	9,640	8,370	6,680
	K*O500L4S**	ZF15K4E	23,160	20,580	18,120	15,850	13,800	12,010	10,490	8,450
	K*O600L4S**	ZF18K4E	27,590	24,620	21,780	19,120	16,700	14,560	12,730	10,180
100°F	K*O100L4S**	ZF03KAE	3,650	3,220	2,840	2,520	2,230	1,990	1,780	1,430
	K*O130L4S**	ZF04KAE	5,070	4,420	3,840	3,320	2,880	2,490	2,180	1,750
	K*O160L4S**	ZF05KAE	6,050	5,290	4,600	3,980	3,430	2,950	2,550	1,950
	K*O230L4S**	ZF07KAE	9,190	8,060	7,120	6,310	5,600	4,950	4,320	2,960
	K*O250L4S**	ZF08K4E	11,410	10,130	8,970	7,920	6,960	6,090	5,290	3,870
	K*O300L4S**	ZF09K4E	12,650	11,400	10,170	8,990	7,870	6,850	5,920	4,500
	K*O350L4S**	ZF11K4E	15,530	14,070	12,580	11,100	9,690	8,390	7,250	5,600
	K*O400L4S**	ZF13K4E	18,390	16,240	14,230	12,370	10,700	9,240	8,030	6,460
	K*O500L4S**	ZF15K4E	22,430	19,880	17,490	15,270	13,270	11,520	10,060	8,110
	K*O600L4S**	ZF18K4E	26,770	23,840	21,070	18,480	16,120	14,040	12,280	9,840
110°F	K*O100L4S**	ZF03KAE	3,360	2,970	2,620	2,320	2,060	1,840	1,645	1,310
	K*O130L4S**	ZF04KAE	4,640	4,050	3,510	3,040	2,630	2,290	2,010	1,640
	K*O160L4S**	ZF05KAE	5,560	4,850	4,210	3,640	3,140	2,710	2,340	1,820
	K*O230L4S**	ZF07KAE	8,430	7,400	6,540	5,810	5,160	4,570	3,980	2,680
	K*O250L4S**	ZF08K4E	10,560	9,380	8,300	7,320	6,440	5,630	4,890	3,570
	K*O300L4S**	ZF09K4E	11,810	10,660	9,530	8,430	7,390	6,430	5,560	4,190
	K*O350L4S**	ZF11K4E	14,480	13,120	11,740	10,370	9,050	7,840	6,750	5,190
	K*O400L4S**	ZF13K4E	17,100	15,030	13,100	11,340	9,780	8,430	7,340	6,000
	K*O500L4S**	ZF15K4E	20,880	18,450	16,150	14,040	12,150	10,500	9,140	7,380
	K*O600L4S**	ZF18K4E	25,050	22,250	19,600	17,140	14,910	12,940	11,300	9,090

* Each asterisk represents a variable character based upon model, voltage, and vintage ordered. See page 5 for nomenclature.

‡ Multiply capacity by .83 when used with 50 Hz power.

Capacity Data (BTUH) - Low Temperature R448A, R449A Scroll - 60 Hz‡

SUCTION TEMPERATURE

AMBIENT TEMPERATURE	MODEL	COMP. MODEL	0°F	-5°F	-10°F	-15°F	-20°F	-25°F	-30°F	-40°F
90°F	K*O100L4S**	ZF03KAE	4,360	3,850	3,400	3,010	2,670	2,370	2,100	1,620
	K*O130L4S**	ZF04KAE	6,090	5,340	4,670	4,060	3,520	3,040	2,640	2,030
	K*O160L4S**	ZF05KAE	7,210	6,350	5,570	4,850	4,210	3,630	3,130	2,330
	K*O230L4S**	ZF07KAE	10,950	9,640	8,500	7,500	6,620	5,830	5,100	3,750
	K*O250L4S**	ZF08K4E	13,370	11,930	10,590	9,360	8,240	7,220	6,270	4,660
	K*O300L4S**	ZF09K4E	14,840	13,280	11,830	10,500	9,270	8,160	7,160	5,400
	K*O350L4S**	ZF11K4E	18,310	16,420	14,640	12,990	11,490	10,090	8,850	6,690
	K*O400L4S**	ZF13K4E	22,470	19,930	17,610	15,470	13,530	11,780	10,230	7,740
	K*O500L4S**	ZF15K4E	27,380	24,340	21,540	19,000	16,700	14,640	12,810	9,830
	K*O600L4S**	ZF18K4E	32,560	29,050	25,830	22,850	20,140	17,690	15,490	11,790
95°F	K*O100L4S**	ZF03KAE	4,190	3,710	3,280	2,910	2,580	2,290	2,020	1,550
	K*O130L4S**	ZF04KAE	5,850	5,130	4,480	3,900	3,380	2,920	2,540	1,970
	K*O160L4S**	ZF05KAE	6,930	6,100	5,340	4,650	4,030	3,480	3,000	2,240
	K*O230L4S**	ZF07KAE	10,500	9,260	8,170	7,210	6,370	5,610	4,910	3,600
	K*O250L4S**	ZF08K4E	12,950	11,550	10,260	9,080	7,980	6,990	6,070	4,500
	K*O300L4S**	ZF09K4E	14,400	12,870	11,480	10,180	9,000	7,920	6,940	5,230
	K*O350L4S**	ZF11K4E	17,760	15,920	14,200	12,610	11,140	9,800	8,580	6,490
	K*O400L4S**	ZF13K4E	21,600	19,150	16,890	14,840	12,990	11,330	9,870	7,550
	K*O500L4S**	ZF15K4E	26,340	23,420	20,720	18,280	16,070	14,120	12,380	9,560
	K*O600L4S**	ZF18K4E	31,360	27,990	24,890	22,040	19,440	17,110	15,020	11,520
100°F	K*O100L4S**	ZF03KAE	4,030	3,560	3,160	2,800	2,490	2,210	1,950	1,480
	K*O130L4S**	ZF04KAE	5,610	4,920	4,290	3,730	3,230	2,800	2,440	1,890
	K*O160L4S**	ZF05KAE	6,650	5,850	5,120	4,460	3,860	3,330	2,870	2,150
	K*O230L4S**	ZF07KAE	10,100	8,880	7,830	6,920	6,110	5,390	4,730	3,460
	K*O250L4S**	ZF08K4E	12,520	11,170	9,920	8,780	7,720	6,760	5,870	4,340
	K*O300L4S**	ZF09K4E	13,950	12,470	11,110	9,860	8,710	7,680	6,720	5,060
	K*O350L4S**	ZF11K4E	17,190	15,400	13,740	12,200	10,790	9,500	8,320	6,290
	K*O400L4S**	ZF13K4E	20,710	18,340	16,170	14,210	12,450	10,890	9,520	7,380
	K*O500L4S**	ZF15K4E	25,260	22,450	19,880	17,550	15,440	13,580	11,940	9,290
	K*O600L4S**	ZF18K4E	30,130	26,890	23,930	21,210	18,750	16,530	14,560	11,280
110°F	K*O100L4S**	ZF03KAE	3,710	3,290	2,920	2,580	2,290	2,030	1,790	1,340
	K*O130L4S**	ZF04KAE	5,090	4,460	3,890	3,380	2,930	2,540	2,210	1,740
	K*O160L4S**	ZF05KAE	6,050	5,310	4,640	4,030	3,490	3,010	2,590	1,950
	K*O230L4S**	ZF07KAE	9,150	8,060	7,110	6,290	5,560	4,910	4,310	3,150
	K*O250L4S**	ZF08K4E	11,650	10,410	9,250	8,190	7,210	6,310	5,490	4,030
	K*O300L4S**	ZF09K4E	13,020	11,640	10,360	9,200	8,150	7,180	6,290	4,730
	K*O350L4S**	ZF11K4E	16,010	14,330	12,780	11,360	10,050	8,860	7,760	5,860
	K*O400L4S**	ZF13K4E	18,810	16,640	14,690	12,940	11,380	10,030	8,880	7,140
	K*O500L4S**	ZF15K4E	22,980	20,440	18,120	16,030	14,170	12,520	11,100	8,830
	K*O600L4S**	ZF18K4E	27,540	24,620	21,950	19,540	17,370	15,410	13,700	10,880

* Each asterisk represents a variable character based upon model, voltage, and vintage ordered. See page 5 for nomenclature.

‡ Multiply capacity by .83 when used with 50 Hz power.

Electrical Data - Hermetic

BASE MODEL NUMBER	COMP. MODEL	COMPRESSOR		COND. FAN FLA	AIR DEFROST/ NO DEFROST PROVISIONS		MAX. EVAP. FAN AMPS†	MAX DEFROST AMPS†	ELECTRIC DEFROST		ELECTRIC DEFROST KIT†
		RLA	LRA		MCA	MOPD			MCA	MOPD	
200-220V/1/50 Hz^											
K*H055E4S**	RST45C1E	5.1	26.5	0.5	15.0	15	4.0	15.0	19.7	20	ED-5
K*H080E4S**	RST55C1E	6.3	33.7	0.5	15.0	15	4.0	15.0	19.7	20	ED-5
208-230V/1/60 Hz											
K*H055E4S**	RST45C1E	4.6	26.5	0.5	15.0	15	4.0	15.0	19.7	20	ED-5
K*H080E4S**	RST55C1E	6.1	33.7	0.5	15.0	15	4.0	15.0	19.7	20	ED-5
K*H100E4S**	RST70C1E	6.9	46.0	0.5	15.0	15	4.0	15.0	19.7	20	ED-5
K*H125E4S**	RST97C1E	9.0	51.0	0.5	15.0	20	4.0	15.0	19.7	25	ED-5
208-230V/3/60 Hz, 200-220V/3/50 Hz‡											
K*H100E4S**^^	RST70C1E	4.9	36.0	0.5	15.0	15	4.0	15.0	19.7	20	ED-5
K*H125E4S**^^	RST97C1E	5.4	36.0	1.0	15.0	15	6.0	15.0	19.7	20	ED-5

* Each asterisk represents a variable character based upon model, refrigerant, voltage, and vintage ordered. See page 5 for nomenclature.

RLA = Rated Load Amps LRA = Locked Rotor Amps MCA = Minimum Circuit Ampacity MOPD = Maximum Overcurrent Protection

MCA includes 1 amp allowance for control circuit requirement.

† Note: Maximum Evap. fan amps and maximum defrost amps are shown to provide ratings when electric defrost is required and is an optional feature. Maximum Amp value used to determine MOPD. Exceeding these values invalidates the listed MOPD and requires a revised calculation. Contact Application Engineering when amp draw requirements deviate from the chart values.

^ K*H100E4S and K*H125E4S are not available in 200-220V/1/50 Hz.

^^ K*H100E4S and K*H125E4S are not available in 200-220V/3/50 Hz.

‡ K*H055E4S, K*H080E4S, and K*H090E4S are not available in 208-230V/3/60 Hz.

‡‡ K*H055E4S, K*H080E4S, K*H090E4S, K*H100E4S, and K*H125E4S are not available in 460V/3/60 Hz.

Electrical Data - Scroll

BASE MODEL NUMBER	COMP. MODEL	COMPRESSOR		COND. FAN FLA	AIR DEFROST/ NO DEFROST PROVISIONS		MAX. EVAP. FAN AMPS†	MAX DEFROST AMPS†	ELECTRIC DEFROST		ELECTRIC DEFROST KIT†
		RLA	LRA		MCA	MOPD			MCA	MOPD	
200-220V/1/50 Hz^											
K*O130E4S**	ZS09KAE	8.0	45.0	0.5	15.0	15	4.0	15.0	19.7	20	ED-5
K*O150E4S**	ZS11KAE	9.2	45.0	1.0	15.0	20	6.0	20.0	26.0	30	ED-6
K*O180E4S**	ZS13KAE	10.1	54.0	1.0	15.0	20	6.0	20.0	26.0	30	ED-6
K*O200E4S**	ZS15KAE	12.4	61.0	1.0	17.5	25	10.0	25.0	32.2	35	ED-7
K*O250E4S**	ZS19KAE	14.5	79.0	1.0	20.1	30	10.0	25.0	32.2	40	ED-7
K*O280E4S**	ZS20KAE	15.6	76.7	3.1	23.6	40.0	12.0	30.0	38.5	50.0	ED-10
K*O300E4S**	ZS21KAE	17.2	87.0	3.1	25.6	40	12.0	30.0	38.5	50	ED-10
K*O350E4S**	ZS26KAE	17.8	122.0	3.1	26.3	40	12.0	30.0	38.5	50	ED-10
K*O400E4S**	ZS29KAE	19.4	133.0	3.1	28.3	45	12.0	30.0	40.3	50	ED-10
K*O450E4S**	ZS33KAE	21.9	133.0	3.1	31.4	50	12.0	30.0	43.4	60	ED-10
K*O500E4S**	ZS38K4E	28.5	169.0	3.1	39.7	60	12.0	30.0	51.7	60	ED-10
208-230V/1/60 Hz											
K*O060M4S**	ZB06KAE	5.4	36.0	0.5	15.0	15	4.0	15.0	19.7	20	ED-5
K*O080M4S**	ZB07KAE	5.9	48.9	0.5	15.0	15	4.0	15.0	19.7	20	ED-5
K*O100M4S**	ZB08KAE	7.2	46.7	0.5	15.0	15	4.0	15.0	19.7	20	ED-5
K*O130E4S**	ZS09KAE	9.0	40.3	0.5	15.0	20	4.0	15.0	19.7	25	ED-5
K*O150E4S**	ZS11KAE	11.3	55.0	1.0	16.1	25	6.0	20.0	26.0	30	ED-6
K*O180E4S**	ZS13KAE	10.8	56.0	1.0	15.5	25	6.0	20.0	26.0	30	ED-6
K*O200E4S**	ZS15KAE	14.1	68.0	1.0	19.6	30	10.0	25.0	32.2	40	ED-7
K*O250E4S**	ZS19KAE	16.2	75.0	1.0	22.2	35	10.0	25.0	32.2	45	ED-7
K*O280E4S**	ZS20KAE	17.8	88.0	3.1	26.4	40.0	12.0	30.0	38.5	50	ED-10
K*O300E4S**	ZS21KAE	20.8	112.0	3.1	30.1	50	12.0	30.0	42.1	60	ED-10
K*O350E4S**	ZS26KAE	21.2	104.0	3.1	30.6	50	12.0	30.0	42.6	60	ED-10
K*O400E4S**	ZS29KAE	23.4	137.0	3.1	33.3	50	12.0	30.0	45.3	60	ED-10
K*O450E4S**	ZS33KAE	23.0	146.0	3.1	32.8	50	12.0	30.0	44.8	60	ED-10
K*O500E4S**	ZS38K4E	28.5	169.0	3.1	39.7	60	12.0	30.0	51.7	60	ED-10
K*O100L4S**	ZF03KAE	5.8	42.6	0.5	15.0	15	4.0	15.0	19.0	20	ED-5
K*O130L4S**	ZF04KAE	6.6	40.3	0.5	15.0	15	4.0	15.0	19.0	20	ED-5
K*O160L4S**	ZF05KAE	7.8	55.0	0.5	15.0	15	4.0	15.0	19.0	25	ED-5
K*O230L4S**	ZF07KAE	12.4	75.0	1.0	17.5	25	6.0	25.0	32.0	35	ED-7
208-230V/1/60 Hz, 200-220V/1/50 Hz‡											
K*O250L4S**	ZF08K4E	14.7	73.0	1.0	20.4	35	10.0	25.0	32.0	45	ED-7
K*O300L4S**	ZF09K4E	16.0	88.0	1.0	22.0	35	10.0	25.0	32.0	45	ED-7
K*O350L4S**	ZF11K4E	18.6	109.0	1.0	25.3	40	10.0	30.0	38.5	50	ED-10
K*O400L4S**	ZF13K4E	22.4	129.0	3.1	32.1	50	12.0	30.0	44.0	60	ED-10
K*O500L4S**	ZF15K4E	24.7	169.0	3.1	35.0	50	12.0	30.0	46.0	60	ED-10

See notes listed under 460V/3/60 Hz electrical table on next page.

Electrical Data - Scroll

VOLTAGE	BASE MODEL NUMBER	COMP. MODEL	COMPRESSOR RLA	COMPRESSOR LRA	COND. FAN FLA	AIR DEFROST/ NO DEFROST PROVISIONS MCA	AIR DEFROST/ NO DEFROST PROVISIONS MOPD	MAX. EVAP. FAN AMPS†	MAX DEFROST AMPS†	ELECTRIC DEFROST MCA	ELECTRIC DEFROST MOPD	ELECTRIC DEFROST KIT†
208-230V/3/60 Hz, 200-220V/3/50 Hz‡	K*O060M4S**	ZB06KAE	3.1	38.9	0.5	15.0	15	4.0	15.0	19.8	20	ED-5
	K*O080M4S**	ZB07KAE	3.4	38.9	0.5	15.0	15	4.0	15.0	19.8	20	ED-5
	K*O100M4S**	ZB08KAE	3.6	38.9	0.5	15.0	15	4.0	15.0	19.8	20	ED-5
	K*O130E4S**	ZS09KAE	7.2	55.4	0.5	15.0	15	4.0	15.0	19.7	20	ED-5
	K*O150E4S**	ZS11KAE	9.3	58.0	1.0	15.0	20	6.0	15.0	19.7	25	ED-5
	K*O180E4S**	ZS13KAE	8.7	58.0	1.0	15.0	20	6.0	15.0	19.7	25	ED-5
	K*O200E4S**	ZS15KAE	9.6	58.0	1.0	15.0	20	10.0	20.0	26.0	30	ED-6
	K*O250E4S**	ZS19KAE	12.3	73.0	1.0	17.3	25	10.0	25.0	32.2	35	ED-7
	K*O280E4S**	ZS20KAE	10.8	76.9	3.1	17.6	25.0	12.0	25.0	32.3	40.0	ED-7
	K*O300E4S**	ZS21KAE	13.7	93.0	3.1	21.2	30	12.0	25.0	33.2	45	ED-7
	K*O350E4S**	ZS26KAE	13.9	93.0	3.1	21.4	35	12.0	25.0	33.4	45	ED-7
	K*O400E4S**	ZS29KAE	18.4	114.0	3.1	27.1	45	12.0	30.0	39.1	50	ED-11
	K*O450E4S**	ZS33KAE	20.0	114.0	3.1	29.1	45	12.0	30.0	41.1	60	ED-11
	K*O500E4S**	ZS38K4E	19.2	123.0	3.1	28.1	45	12.0	30.0	40.1	50	ED-11
	K*O600E4S**	ZS45K4E	21.5	156.0	3.1	30.9	50	12.0	30.0	42.9	60	ED-11
	K*O100L4S**	ZF03KAE	3.7	42.6	0.5	15.0	15	4.0	15.0	19.7	20	ED-5
	K*O130L4S**	ZF04KAE	6.0	57.0	0.5	15.0	15	4.0	15.0	19.7	20	ED-5
	K*O160L4S**	ZF05KAE	6.7	59.0	0.5	15.0	15	4.0	15.0	19.7	20	ED-5
	K*O230L4S**	ZF07KAE	7.8	59.0	1.0	15.0	15	6.0	15.0	19.7	25	ED-5
	K*O250L4S**	ZF08K4E	8.7	63.0	1.0	15.0	20	10.0	20.0	26.0	30	ED-6
	K*O300L4S**	ZF09K4E	8.7	77.0	1.0	15.0	20	10.0	20.0	26.0	30	ED-6
	K*O350L4S**	ZF11K4E	10.9	88.0	1.0	15.6	25	10.0	25.0	32.2	35	ED-7
	K*O400L4S**	ZF13K4E	11.9	99.0	3.1	19.0	30	12.0	25.0	32.2	40	ED-7
	K*O500L4S**	ZF15K4E	17.0	123.0	3.1	25.4	40	12.0	30.0	38.5	50	ED-11
	K*O600L4S**	ZF18K4E	19.6	156.0	3.1	28.6	45	12.0	30.0	40.6	60	ED-11
460V/3/60 Hz, 380V/3/50 Hz‡	K*O130E4S**++	ZS09KAE	3.4	28.0	0.4	15.0	15	2.0	15.0	19.7	20	ED-17
	K*O150E4S**	ZS11KAE	3.8	28.0	0.8	15.0	15	3.0	15.0	19.7	20	ED-17
	K*O180E4S**	ZS13KAE	4.3	29.0	0.8	15.0	15	3.0	15.0	19.7	20	ED-17
	K*O200E4S**	ZS15KAE	4.8	29.0	0.8	15.0	15	5.0	15.0	19.7	20	ED-17
	K*O250E4S**	ZS19KAE	5.8	38.0	0.8	15.0	15	5.0	15.0	19.7	20	ED-17
	K*O280E4S**	ZS20KAE	4.9	41.6	2.5	15.0	15.0	6.0	15.0	15.6	20	ED-17
	K*O300E4S**	ZS21KAE	6.2	48.0	2.5	15.0	15	6.0	15.0	19.7	20	ED-17
	K*O350E4S**	ZS26KAE	6.2	48.0	2.5	15.0	15	6.0	15.0	19.7	20	ED-17
	K*O400E4S**	ZS29KAE	8.4	58.0	2.5	15.0	20	6.0	15.0	20.0	25	ED-17
	K*O450E4S**	ZS33KAE	9.0	52.0	2.5	15.0	20	6.0	20.0	26.0	30	ED-18
	K*O500E4S**	ZS38K4E	8.7	62.0	2.5	15.0	20	6.0	20.0	26.0	30	ED-18
	K*O600E4S**	ZS45K4E	10.3	75.0	2.5	16.3	25	6.0	20.0	26.0	30	ED-18
	K*O230L4S**	ZF07K4E	3.7	28.0	0.8	15.0	15	3.0	15.0	19.7	20	ED-17
	K*O250L4S**	ZF08K4E	4.5	31.0	0.8	15.0	15	5.0	15.0	19.7	20	ED-17
	K*O300L4S**	ZF09K4E	4.5	39.0	0.8	15.0	15	5.0	15.0	19.7	20	ED-17
	K*O350L4S**	ZF11K4E	5.8	44.0	0.8	15.0	15	5.0	15.0	19.7	20	ED-17
	K*O400L4S**	ZF13K4E	6.4	49.5	2.5	15.0	15	6.0	15.0	19.7	20	ED-17
	K*O500L4S**	ZF15K4E	8.0	62.0	2.5	15.0	20	6.0	15.0	19.7	25	ED-17
	K*O600L4S**	ZF18K4E	8.0	75.0	2.5	15.0	20	6.0	15.0	19.7	25	ED-17

* Each asterisk represents a variable character based upon model, voltage, and vintage ordered. See page 5 for nomenclature.

RLA = Rated Load Amps LRA = Locked Rotor Amps MCA = Minimum Circuit Ampacity MOPD = Maximum Overcurrent Protection

MCA includes 1 amp allowance for control circuit requirement.

† Note: Maximum Evap. fan amps and maximum defrost amps are shown to provide ratings when electric defrost is required and is an optional feature. Maximum Amp value used to determine MOPD. Exceeding these values invalidates the listed MOPD and requires a revised calculation. Contact Application Engineering when amp draw requirements deviate from the chart values.

^ K*O600L4S and K*O600E4S are not available in 200-220V/1/50 Hz or 208-230V/1/60 Hz.

‡ K*O060M4S**, K*O080M4S**, K*O100M4S**, K*O100L4S**, K*O130L4S**, and K*O160L4S** are not available in 200-220V/1/50 Hz, 200-220V/3/50, 380V/3/50 Hz or 460V/3/60 Hz. K*O230L4S** is not available in 200-220V/1/50 Hz, 200-220V/3/50, or 380V/3/50 Hz.

++ KBO130E4S** is not available in 460V.

Specifications - All Models

MODEL DATA			CONNECTIONS (IN.)		PUMP DOWN CAPACITY							
					STANDARD RECEIVER^				OVERSIZED RECEIVER^			
MODEL NUMBER	COMP. MODEL	HP	LIQUID^	SUCTION	90% R404A (LBS.)	90% R407A (LBS)	90% R407C (LBS.)	90% R448A, R449A (LBS.)	90% R404A (LBS.)	90% R407A (LBS.)	90% R407C (LBS.)	90% R448A, R449A (LBS.)
Extended Medium Temperature Hermetic												
K*H055E4S**	RST45C1E	1/2	3/8	5/8	–	–	–	6.1	–	–	–	11.6
K*H080E4S**	RST55C1E	3/4	3/8	5/8	–	–	–	6.1	–	–	–	11.6
K*H100E4S**	RST70C1E	1	3/8	5/8	5.9	–	6.7	6.1	11.0	–	12.7	11.6
K*H125E4S**	RST97C1E	1-1/4	1/2	7/8	11.0	–	12.7	11.6	13.6	–	15.7	14.3
Medium/Extended Medium Temperature Scroll												
K*O060M4S**	ZB06KAE	1/2	3/8	5/8	5.9	6.4	6.7	6.1	11.0	12.1	12.7	11.6
K*O080M4S**	ZB07KAE	3/4	3/8	5/8	5.9	6.4	6.7	6.1	11.0	12.1	12.7	11.6
K*O100M4S**	ZB08KAE	1	3/8	5/8	5.9	6.4	6.7	6.1	11.0	12.1	12.7	11.6
K*O130E4S**	ZS09KAE	1	3/8	5/8	5.9	6.4	6.7	6.1	11.0	12.1	12.7	11.6
K*O150E4S**	ZS11KAE	1-1/4	1/2	7/8	11.0	12.1	12.7	11.6	13.6	15.0	15.7	14.3
K*O180E4S**	ZS13KAE	1-1/2	1/2	7/8	11.0	12.1	12.7	11.6	13.6	15.0	15.7	14.3
K*O200E4S**	ZS15KAE	2	1/2	7/8	13.6	15.0	15.7	14.3	20.9	23.1	24.1	22.0
K*O250E4S**	ZS19KAE	2-1/2	1/2	7/8	13.6	15.0	15.7	14.3	20.9	23.1	24.1	22.0
K*O280E4S**	ZS20KAE	2-3/4	5/8	1/1/8	28	30.9	32.3	29.4	37.9	41.8	43.7	39.8
K*O300E4S**	ZS21KAE	3	5/8	1-1/8	28.0	30.9	32.3	29.4	37.9	41.8	43.7	39.8
K*O350E4S**	ZS26KAE	3-1/2	5/8	1-1/8	28.0	30.9	32.3	29.4	37.9	41.8	43.7	39.8
K*O400E4S**	ZS29KAE	4	5/8	1-1/8	28.0	30.9	32.3	29.4	37.9	41.8	43.7	39.8
K*O450E4S**	ZS33KAE	4-1/2	5/8	1-1/8	28.0	30.9	32.3	29.4	37.9	41.8	43.7	39.8
K*O500E4S**	ZS38K4E	5	5/8	1-1/8	28.0	30.9	32.3	29.4	37.9	41.8	43.7	39.8
K*O600E4S**	ZS45K4E	6	5/8	1-1/8	28.0	30.9	32.3	29.4	37.9	41.8	43.7	39.8
Low Temperature Scroll												
K*O100L4S**	ZF03KAE	1	3/8	5/8	5.9	6.4	6.7	6.1	11.0	12.1	12.7	11.6
K*O130L4S**	ZF04KAE	1-1/3	3/8	5/8	5.9	6.4	6.7	6.1	11.0	12.1	12.7	11.6
K*O160L4S**	ZF05KAE	1-1/2	3/8	5/8	5.9	6.4	6.7	6.1	11.0	12.1	12.7	11.6
K*O230L4S**	ZF07KAE	2-1/3	3/8	7/8	11.0	12.1	12.7	11.6	13.6	15.0	15.7	14.3
K*O250L4S**	ZF08K4E	2-1/2	3/8	7/8	13.6	15.0	15.7	14.3	20.9	23.1	24.1	22.0
K*O300L4S**	ZF09K4E	3	3/8	7/8	13.6	15.0	15.7	14.3	20.9	23.1	24.1	22.0
K*O350L4S**	ZF11K4E	3-1/2	3/8	7/8	13.6	15.0	15.7	14.3	20.9	23.1	24.1	22.0
K*O400L4S**	ZF13K4E	4	1/2	1-1/8	28.0	30.9	32.3	29.4	37.9	41.8	43.7	39.8
K*O500L4S**	ZF15K4E	5	1/2	1-1/8	28.0	30.9	32.3	29.4	37.9	41.8	43.7	39.8
K*O600L4S**	ZF18K4E	6	1/2	1-1/8	28.0	30.9	32.3	29.4	37.9	41.8	43.7	39.8

* Each asterisk represents a variable character based upon model, refrigerant, voltage, and vintage ordered. See page 5 for nomenclature.

† Estimated dBA values at 10 feet from the unit. Correction factors: Deduct 6 dBA for 20 to 40 feet, 12 dBA @ 40 to 60 feet. Ratings at the outlet of the discharge air. The actual measurements may vary depending upon installation variables. Environmental factors may have a significant influence on this data.

Specifications - All Models

MODEL DATA		CABINET SIZE††	FAN QTY.	DIMENSIONS (IN.)			APPROX. SHIP WT. (LBS.)	SOUND DATA dBA†
MODEL NUMBER	COMP. MODEL			D	W	H		
Extended Medium Temperature Hermetic								
K*H055E4S**	RST45C1E	FM1	1	28-1/4	27-7/8	18-3/4	152	68
K*H080E4S**	RST55C1E	FM1	1	28-1/4	27-7/8	18-3/4	156	68
K*H100E4S**	RST70C1E	FM1	1	28-1/4	27-7/8	18-3/4	167	68
K*H125E4S**	RST97C1E	FM2	2	28-1/4	39-7/8	18-3/4	195	72
Extended Medium Temperature Scroll								
K*O060M4S**	ZB06KAE	FM1	1	28-1/4	27-7/8	18-3/4	195	70
K*O080M4S**	ZB07KAE	FM1	1	28-1/4	27-7/8	18-3/4	195	70
K*O100M4S**	ZB08KAE	FM1	1	28-1/4	27-7/8	18-3/4	195	70
K*O130E4S**	ZS09KAE	FM1	1	28-1/4	27-7/8	18-3/4	195	70
K*O150E4S**	ZS11KAE	FM2	2	28-1/4	39-7/8	18-3/4	205	71
K*O180E4S**	ZS13KAE	FM2	2	28-1/4	39-7/8	18-3/4	210	71
K*O200E4S**	ZS15KAE	FM3	2	28-1/4	39-7/8	21-1/4	215	71
K*O250E4S**	ZS19KAE	FM3	2	28-1/4	39-7/8	21-1/4	230	72
K*O280E4S**	ZS20KAE	FM4	1	33	43-7/8	35	305	72
K*O300E4S**	ZS21KAE	FM4	1	33	43-7/8	35	305	72
K*O350E4S**	ZS26KAE	FM4	1	33	43-7/8	35	325	72
K*O400E4S**	ZS29KAE	FM4	1	33	43-7/8	35	352	74
K*O450E4S**	ZS33KAE	FM4	1	33	43-7/8	35	375	74
K*O500E4S**	ZS38K4E	FM4	1	33	43-7/8	35	383	74
K*O600E4S**	ZS45K4E	FM4	1	33	43-7/8	35	405	76
Low Temperature Scroll								
K*O100L4S**	ZF03KAE	FM1	1	28-1/4	27-7/8	18-3/4	195	70
K*O130L4S**	ZF04KAE	FM1	1	28-1/4	27-7/8	18-3/4	195	70
K*O160L4S**	ZF05KAE	FM1	1	28-1/4	27-7/8	18-3/4	195	70
K*O230L4S**	ZF07KAE	FM2	2	28-1/4	39-7/8	18-3/4	230	71
K*O250L4S**	ZF08K4E	FM3	2	28-1/4	39-7/8	21-1/4	240	73
K*O300L4S**	ZF09K4E	FM3	2	28-1/4	39-7/8	21-1/4	245	73
K*O350L4S**	ZF11K4E	FM3	2	28-1/4	39-7/8	21-1/4	255	73
K*O400L4S**	ZF13K4E	FM4	1	33	43-7/8	35	352	73
K*O500L4S**	ZF15K4E	FM4	1	33	43-7/8	35	367	74
K*O600L4S**	ZF18K4E	FM4	1	33	43-7/8	35	383	76

* Each asterisk represents a variable character based upon model, refrigerant, voltage, and vintage ordered. See page 5 for nomenclature.

† Estimated dBA values at 10 feet from the unit. Correction factors: Deduct 6 dBA for 20 to 40 feet, 12 dBA @ 40 to 60 feet. Ratings at the outlet of the discharge air. The actual measurements may vary depending upon installation variables. Environmental factors may have a significant influence on this data.

†† See pages 21-22 for associated drawings.

Specifications - All Models

Department of Energy Annual Walk-In Energy Factor (AWEF) Ratings					
Base Model Number	AWEF				
	R404A	R407A	R407C	R448A	R449A
Hermetic Extended Medium Temperature Models					
K*H055E4S**	–	–	–	7.60	7.60
K*H080E4S**	–	–	–	7.60	7.60
K*H100E4S**	7.60	–	7.60	7.60	7.60
K*H125E4S**	7.60	–	7.60	7.60	7.60
Scroll Extended Medium Temperature Models					
K*O060M4S**	7.60	7.60	7.60	7.60	7.60
K*O080M4S**	7.60	7.60	7.60	7.60	7.60
K*O100M4S**	7.60	7.60	7.60	7.60	7.60
K*O130E4S**	7.60	7.60	7.60	7.60	7.60
K*O150E4S**	7.60	7.60	7.60	7.60	7.60
K*O180E4S**	7.60	7.60	7.60	7.60	7.60
K*O200E4S**	7.60	7.60	7.60	7.60	7.60
K*O250E4S**	7.60	7.60	7.60	7.60	7.60
K*O280E4S**	7.60	7.60	7.60	7.60	7.60
K*O300E4S**	7.60	7.60	7.60	7.60	7.60
K*O350E4S**	7.60	7.60	7.60	7.60	7.60
K*O400E4S**	7.60	7.60	7.60	7.60	7.60
K*O450E4S**	7.60	7.60	7.60	7.60	7.60
K*O500E4S**	7.60	7.60	7.60	7.60	7.60
K*O600E4S**	7.60	7.60	7.60	7.60	7.60

If the medium temperature model has a numerical value in the table above, the following statement applies: "This refrigeration system is designed and certified for use in walk-in cooler applications."

Scroll Low Temperature Models					
K*O100L4S**	2.89	2.89	2.89	2.89	2.89
K*O130L4S**	2.94	2.94	2.94	2.94	2.94
K*O160L4S**	2.98	2.98	2.98	2.98	2.98
K*O230L4S**	3.14	3.14	3.14	3.14	3.14
K*O250L4S**	3.15	3.15	3.15	3.15	3.15
K*O300L4S**	3.15	3.15	3.15	3.15	3.15
K*O350L4S**	3.15	3.15	3.15	3.15	3.15
K*O400L4S**	3.15	3.15	3.15	3.15	3.15
K*O500L4S**	3.15	3.15	3.15	3.15	3.15
K*O600L4S**	3.15	3.15	3.15	3.15	3.15

If the low temperature model has a numerical value in the table above, the following statement applies: "This refrigeration system is designed and certified for use in walk-in freezer applications."

* Each asterisk represents a variable character based upon model, voltage, and vintage ordered. See page 5 for nomenclature.

Physical Dimensions - All Models

CABINET SIZE FM1

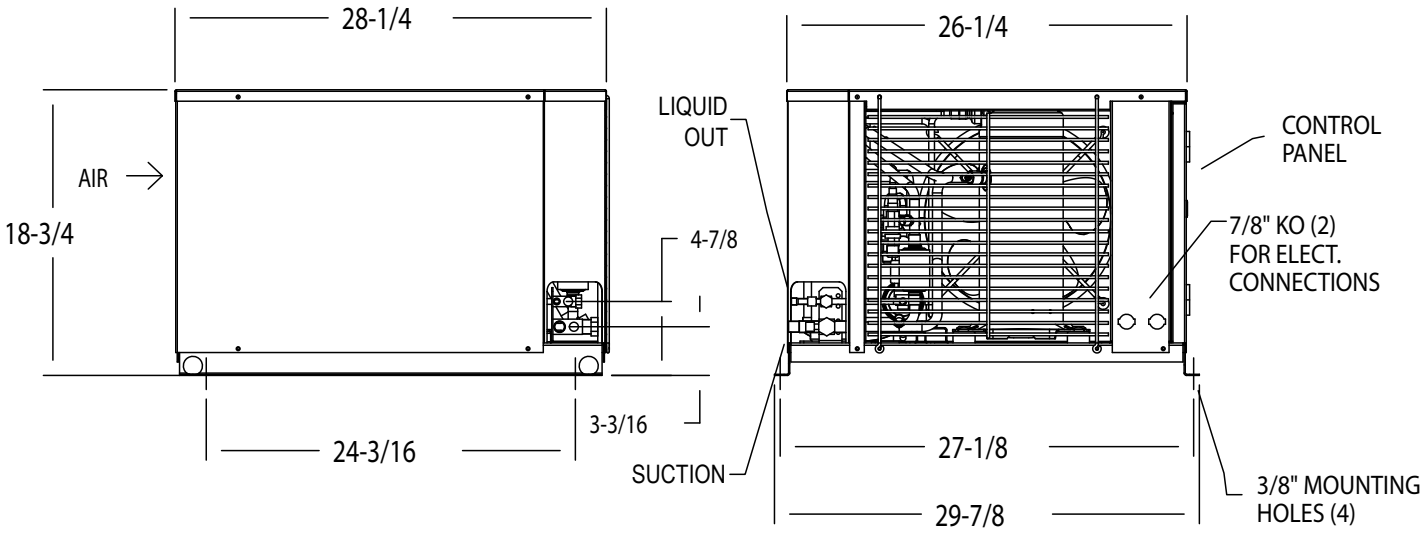

CABINET SIZE FM2

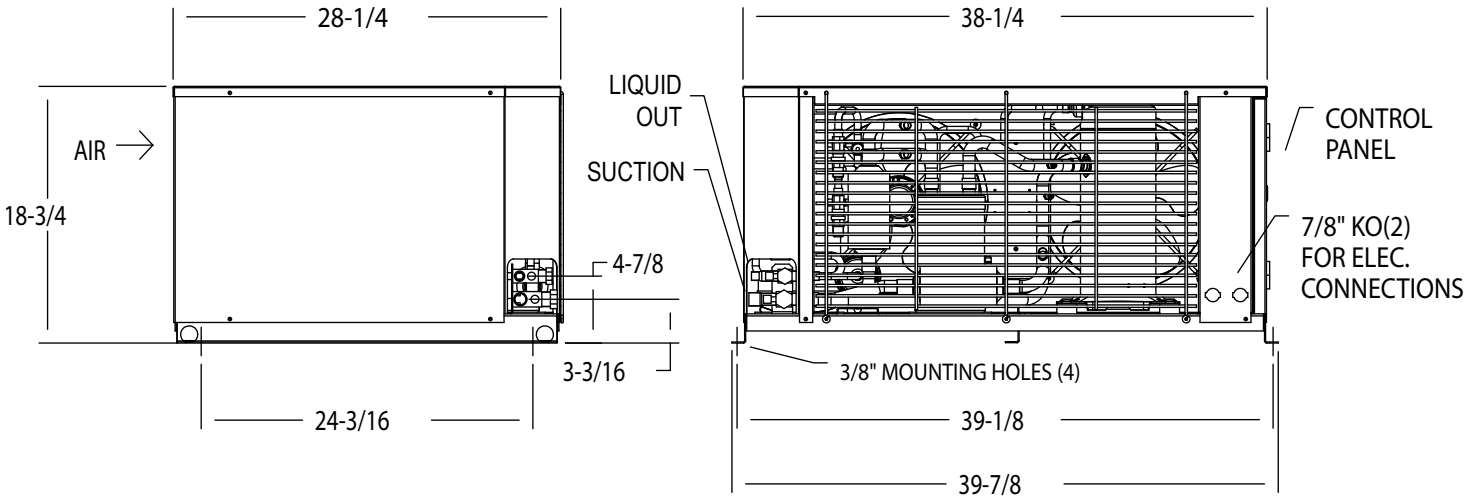

** Dimensions are in inches.*

Physical Dimensions - All Models

CABINET SIZE FM3

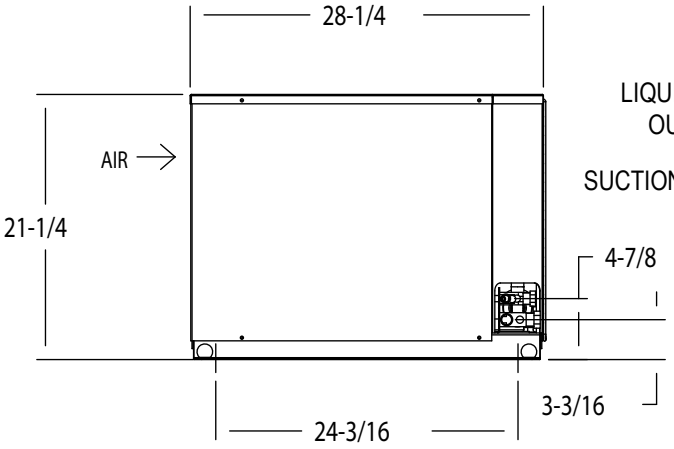

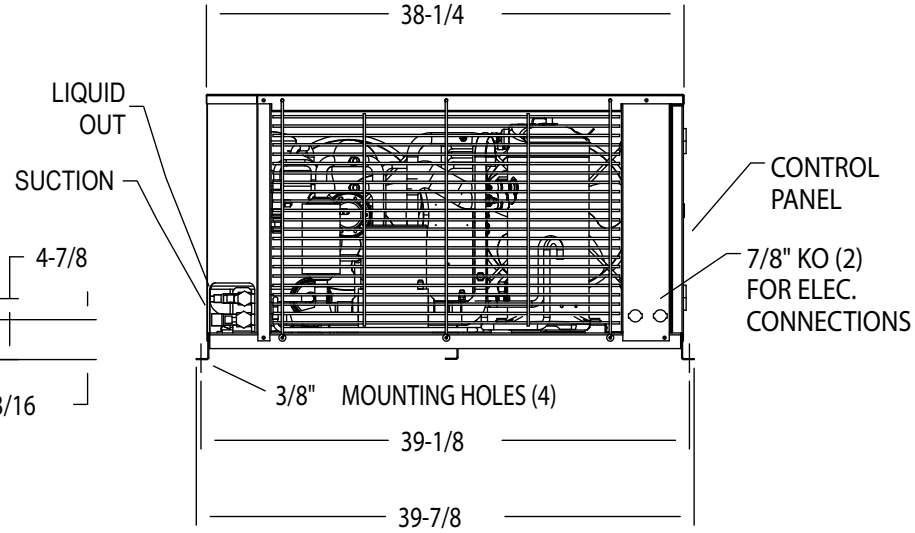

CABINET SIZE FM4

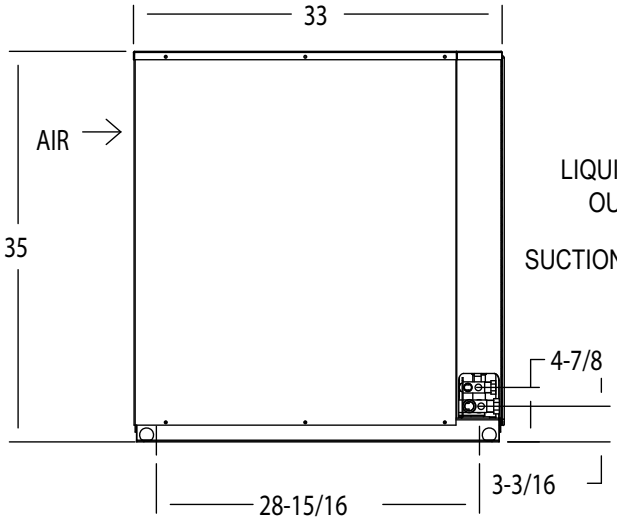

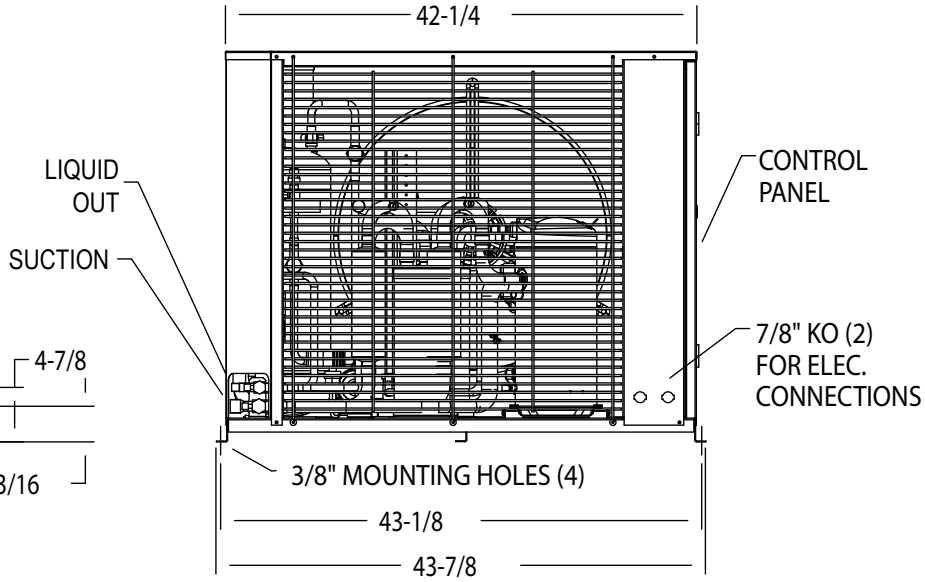

** Dimensions are in inches.*

DUE TO CONTINUING PRODUCT DEVELOPMENT, SPECIFICATIONS ARE SUBJECT TO CHANGE WITHOUT NOTICE.