KRAMER

Catalog KM-QVX-0221A
Replaces KM-QVX-0720A

QV-SERIES

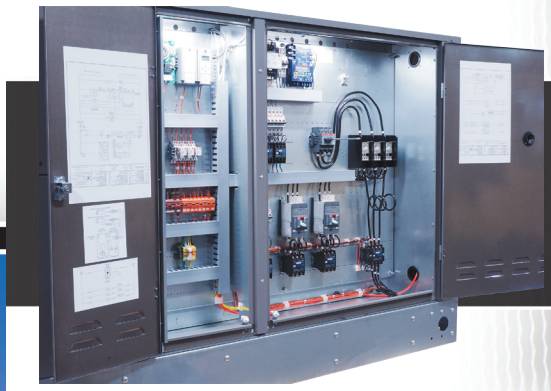

15 TO 100 HP AIR COOLED CONDENSING UNITS

with Copeland Discus™ Compressors

2018 DEALER DESIGN AWARDS
the NEWS | SILVER

c UL US

Efficient and Accessible

The design of the innovative QV-Series Condensing Units™ sets the new standard for efficiency, reliability and serviceability to meet the needs of the food processing, industrial cooling and warehousing industries. Models incorporate features from our award-winning Quantum Air™ Condensers such as the floating coil design with generously sized condensers for energy savings, swept wing fan blades for optimal air flow, and LED lighted control panel and hinged venturi panels for easy access. A floored compressor cabinet with removable compressor tray, service convenience outlet, hinged and removable access panels, integral liquid subcooling circuit, and paint protected galvanized steel housing are all standard features of these units.

Standard Features

- Copeland Discus™ compressor^
- Available in single, dual or parallel compressor configurations from 15 to 100 HP
- Prepaint gray exterior/ G60 galvanized steel outdoor cabinet construction
- Heavy gauge G90 galvanized steel frame
- Award-winning floating coil design with generously sized condensers for energy savings
- Integral subcooling circuit boosts energy efficiency
- Mechanically formed pre-bent tubing reduces potential leaks
- Compatible with multiple refrigerants
- Optimized for high glide refrigerants
- Separate power and control electrical panels
- Swept wing fan/Venturi improves airflow and sound
- Hinged and removable access panels
- Flip top hinged Venturi panels for easy servicing
- Floored compressor cabinet with removable compressor tray
- LED control and compressor panel lighting
- 110V service convenience outlet
- Service gauge hooks
- 3 Phase condenser fan motors
- Color-coded high and low pressure hoses
- Electronic oil failure control
- Horizontal receiver
- Receiver isolation valves
- Refrigerant relief valve
- Replaceable core liquid line filter
- Suction line and discharge line vibrasorbers
- Liquid line isolation valve with sight glass
- Single point alarm with liquid line solenoid lockout
- Control circuit and condenser fan fusing
- Condenser fan contactors
- UL and cUL listed for outdoor use

- **Flooded (KF) Models** include an adjustable head pressure control valve
- **Non-Flooded (KB) Models** include electronic fan cycling control and a minimum charge monitor
- **Parallel Compressor Models (KF*P/ KB*P)** include an oil management system

^ Also available with Bitzer Ecoline compressor - see separate QV-Series brochure (KM-QVB) for information

MODEL NUMBER NOMENCLATURE

K	F	D	V	30	M	4S	G
Brand	**Model Style**	**Compressor Type**	**Configuration**	**Horsepower**	**Temperature Range**	**Refrigerant Type**	**Voltage^**
K = Kramer	B = Non-Flooded F = Flooded	D = Copleland Discus	V = Single Compressor D = Dual Piping P = Parallel Piping		M = Medium Temp. L = Low Temp.	4S = Multiple Refrigerants (R404A, R407A, R407C, R407F, R448A, R449A/B)	E = 208-230/3/60 G = 460/3/60

Note: ^ 50 Hz available. Contact Factory for additional information.

Options

- EC fan motors for variable speed
- Air defrost timer or electric defrost components
- Electric defrost kits available for up to 4 evaporators
- Oversized receiver
- ElectroFin© or Bronz-Glow coil coating
- Liquid injection on low temp. compressors
- Heated and insulated receiver
- Oil separator with check valve
- Fan cycling control (RF models)
- Suction accumulator
- Liquid filter isolation valve
- Liquid line solenoid valve (Shipped loose)
- Suction isolation valve
- Suction filter isolation valve
- Replaceable core suction filter
- Crankcase pressure regulator
- Hot gas bypass (Discharge tee, regulator or ball valve)
- Heat reclaim (Sporlan 3 way valve)
- Thru-the-door non-fused disconnect switch
- Thru-the-door fused disconnect (200 amp Max)
- Thru-the-door breaker disconnect (200 amp Max)
- Phase loss monitor
- Anti short cycle timer
- Compressor unloading

	Features and Options		
	DESCRIPTION	KF FLOODED MODELS	KB NON-FLOODED MODELS
GENERAL CONSTRUCTION	Vertical air discharge configuration	STANDARD	
	Prepaint gray exterior/G60 Galvanized outdoor cabinet construction	STANDARD	
	G90 Galvanized frame	STANDARD	
	High and low voltage electrical panels with hinged door	STANDARD	
	Single point electrical connection	STANDARD	
CONDENSER COIL AND FANS	Award-winning floating coil design	STANDARD	
	Copper tubes mechanically expanded into aluminum fins	STANDARD	
	Subcooling circuit	STANDARD	
	Flip top condenser fan venturi(s)	STANDARD	
	Swept wing fan blades for optional air flow	STANDARD	
	Enhanced tube	STANDARD	
	Adjustable flooded head pressure control valve	STANDARD	N/A
COIL COATINGS	ElectroFin® or Bronz-Glow	OPTIONAL	
COMPRESSORS	Crankcase heater	STANDARD	
	Electronic oil failure control	STANDARD	
	Suction line and discharge line vibrasorbers	STANDARD	
	Floored compressor cabinet with removable compressor tray	STANDARD	
	Compressor unloading with suction pressure contactor (max steps)	OPTIONAL	
	Liquid injection on low temp. compressors	OPTIONAL	
ELECTRICAL AND CONTROL PANEL	3 Phase condenser fan motors	STANDARD	
	EC fan motors with electronic variable speed control	OPTIONAL	
	Hinged and removable access panels	STANDARD	
	Condenser fan contactors	STANDARD	
	Control circuit and condenser fan fuses	STANDARD	
	Control circuit and condenser fan breakers	OPTIONAL	
	Thru-the-door non-fused disconnect (200 amp Max)	OPTIONAL	
	Thru-the-door fused disconnect (200 amp Max)	OPTIONAL	
	Thru-the-door breaker disconnect (200 amp Max)	OPTIONAL	
	Phase loss monitor (Symcom 250A or ICM450)	OPTIONAL	
	Air defrost time clock	OPTIONAL	
	Up to 4 evaporators electric defrost kit	OPTIONAL	
	Single point alarm with liquid line solenoid lockout	STANDARD	
	Anti short cycle timer	OPTIONAL	
	Pump down switch	STANDARD	
	208-230 Control voltage	STANDARD	
	Service and control LED control panel lighting (Panel door switch/service toggle)	STANDARD	
	110 VAC 20 Amp convenience outlet	STANDARD	
REFRIGERATION	High and low pressure controls (with color-coded hose connections)	STANDARD	
	Horizontal receiver	STANDARD	
	Receiver isolation valve	STANDARD	
	Refrigerant relief valve	STANDARD	
	Replaceable core liquid line filter	STANDARD	
	Sight glass	STANDARD	
	Heated and insulated receiver	OPTIONAL	
	Oil separator with check valve	OPTIONAL	
	Oil management system on Parallel Compressor Configurations	STANDARD PARALLEL	
	Oversize receiver	OPTIONAL	
	Color-coded refrigerant hoses (red and blue)	STANDARD	
	Suction accumulator	OPTIONAL	
	Boil out suction accumulator	OPTIONAL	
	Liquid line isolation valve with sight glass	STANDARD	
	Liquid filter isolation valve	OPTIONAL	
	Liquid line solenoid valve (Shipped loose)	OPTIONAL	
	Suction isolation valve	OPTIONAL	
	Suction filter isolation valve	OPTIONAL	
	Replaceable core suction filter	OPTIONAL	
	Hot gas bypass (Discharge tee, regulator or ball valve)	OPTIONAL	
	Heat reclaim (Sporlan 3 way valve)	OPTIONAL	
	Crankcase pressure regulator	OPTIONAL	
	Electronic fan cycling control	OPTIONAL	STANDARD
	Minimum charge monitor	N/A	OPTIONAL
	Receiver level gauge	OPTIONAL	

Capacity Data (BTUH) - Med. Temp. R404A Discus - Single Compressor - 60 Hz‡

SUCTION TEMPERATURE

MODEL	COMP. MODEL	45	40	35	30	25	20	10	0	-10
90°F Ambient										
K*DV015M4S*	3DS3R17ME	205,700	191,700	176,700	162,000	149,400	137,300	113,300	92,300	73,200
K*DV020M4S*	4DBNR20ME	258,200	242,300	224,600	206,700	190,600	174,800	142,900	115,300	93,100
K*DV025M4S*	4DHNR22ME	273,200	256,700	238,100	219,500	202,000	185,400	152,400	123,600	98,200
K*DV030M4S*	4DJNR28ME	343,400	322,900	299,600	275,600	253,200	229,400	190,800	151,400	121,000
K*DV035M4S*	6DHNR35ME	437,800	406,000	372,700	340,600	312,300	285,500	235,200	190,700	150,400
K*DV040M4S*	6DJNR40ME	484,300	453,200	419,400	386,000	356,800	328,300	271,900	221,900	177,400
K*DV050M4S*	6DUNR49ME	563,500	530,700	492,800	455,800	421,700	388,500	320,400	262,600	216,100
95°F Ambient										
K*DV015M4S*	3DS3R17ME	196,900	183,100	168,600	154,700	142,700	131,200	108,200	87,800	69,600
K*DV020M4S*	4DBNR20ME	247,100	231,400	214,200	196,900	181,300	165,600	135,800	109,700	88,300
K*DV025M4S*	4DHNR22ME	261,500	245,400	226,900	209,400	192,700	176,000	144,600	117,000	94,100
K*DV030M4S*	4DJNR28ME	322,300	300,100	275,600	253,200	233,100	212,700	174,700	140,300	110,000
K*DV035M4S*	6DHNR35ME	417,600	386,200	355,000	324,800	297,900	273,000	223,600	181,100	141,800
K*DV040M4S*	6DJNR40ME	464,100	433,500	400,100	367,800	340,200	311,800	258,400	210,300	167,700
K*DV050M4S*	6DUNR49ME	539,700	507,600	471,100	435,100	402,500	368,500	305,300	249,400	204,400
100°F Ambient										
K*DV015M4S*	3DS3R17ME	–	174,600	160,700	147,300	135,800	124,200	103,000	83,600	66,100
K*DV020M4S*	4DBNR20ME	–	221,300	204,000	187,500	172,500	157,800	129,200	104,000	83,400
K*DV025M4S*	4DHNR22ME	–	233,900	216,300	198,900	183,900	167,300	137,500	110,400	88,600
K*DV030M4S*	4DJNR28ME	–	285,600	262,300	240,500	221,100	201,700	165,600	132,900	103,900
K*DV035M4S*	6DHNR35ME	–	368,400	337,600	308,300	283,200	258,000	212,300	170,900	133,700
K*DV040M4S*	6DJNR40ME	–	413,000	381,500	350,700	323,300	296,500	245,000	199,100	158,600
K*DV050M4S*	6DUNR49ME	–	484,200	449,400	414,500	382,500	350,400	290,000	236,100	193,300
110°F Ambient										
K*DV015M4S*	3DS3R17ME	–	–	144,900	132,900	122,300	111,900	92,600	75,100	59,100
K*DV020M4S*	4DBNR20ME	–	–	183,400	168,500	155,500	141,500	115,400	92,200	73,500
K*DV025M4S*	4DHNR22ME	–	–	195,600	179,800	165,100	150,300	122,400	98,300	77,900
K*DV030M4S*	4DJNR28ME	–	–	237,600	215,300	197,600	180,000	147,000	114,300	89,600
K*DV035M4S*	6DHNR35ME	–	–	302,700	277,000	254,500	231,300	189,300	151,400	117,300
K*DV040M4S*	6DJNR40ME	–	–	343,700	315,200	290,100	265,300	219,100	176,800	140,200
K*DV050M4S*	6DUNR49ME	–	–	406,200	374,000	344,200	314,700	258,700	206,600	170,300

* Each asterisk represents a variable character based upon model and voltage ordered. See page 2 for nomenclature.

All capacities are calculated at 65°F return gas temperature and dew point values.

‡ Multiply capacity by .83 when used with 50 Hz power.

Capacity Data (BTUH) - Med. Temp. R407A, R407F Discus - Single Compressor - 60 Hz‡

SUCTION TEMPERATURE

MODEL	COMP. MODEL	45	40	35	30	25	20	10	0	-10
90°F Ambient										
K*DV015M4S*	3DS3R17ME	199,700	183,400	167,800	153,900	140,900	127,800	103,100	80,000	61,200
K*DV020M4S*	4DBNR20ME	244,100	223,600	203,900	187,100	171,500	157,200	127,800	101,300	78,600
K*DV025M4S*	4DHNR22ME	281,400	256,800	233,300	214,000	195,100	177,300	144,400	113,800	87,600
K*DV030M4S*	4DJNR28ME	330,300	300,900	276,900	254,900	233,200	212,100	172,000	133,300	99,200
K*DV035M4S*	6DHNR35ME	410,100	377,900	346,300	318,300	291,200	264,300	214,100	167,600	129,400
K*DV040M4S*	6DJNR40ME	474,600	438,300	401,600	369,300	339,400	308,500	250,200	195,600	151,400
K*DV050M4S*	6DUNR49ME	555,800	510,300	472,700	437,400	402,000	368,800	298,000	233,800	179,700
95°F Ambient										
K*DV015M4S*	3DS3R17ME	191,800	175,300	161,500	148,100	135,600	123,400	98,800	76,300	57,800
K*DV020M4S*	4DBNR20ME	235,100	213,200	196,100	179,800	164,800	150,700	122,400	96,900	74,800
K*DV025M4S*	4DHNR22ME	270,500	247,000	225,000	205,300	187,600	171,200	138,700	108,900	83,200
K*DV030M4S*	4DJNR28ME	317,500	291,400	266,300	244,800	223,700	203,700	165,000	127,600	94,800
K*DV035M4S*	6DHNR35ME	396,200	361,900	333,700	307,000	281,400	257,000	206,900	160,800	123,200
K*DV040M4S*	6DJNR40ME	458,400	423,700	389,000	357,800	327,700	299,700	241,500	187,800	145,000
K*DV050M4S*	6DUNR49ME	536,700	493,000	456,600	422,000	388,100	352,900	286,300	224,000	171,500
100°F Ambient										
K*DV015M4S*	3DS3R17ME	–	168,500	155,200	142,300	130,200	118,600	94,600	72,600	54,600
K*DV020M4S*	4DBNR20ME	–	205,100	188,400	172,600	158,000	144,300	116,800	92,300	70,800
K*DV025M4S*	4DHNR22ME	–	237,500	216,100	197,200	179,900	164,000	132,200	103,700	79,500
K*DV030M4S*	4DJNR28ME	–	279,700	255,400	234,800	214,400	194,400	157,400	122,100	90,900
K*DV035M4S*	6DHNR35ME	–	352,100	322,300	296,400	271,700	248,000	198,800	154,100	117,300
K*DV040M4S*	6DJNR40ME	–	404,800	374,200	345,000	315,700	286,900	232,400	179,900	137,600
K*DV050M4S*	6DUNR49ME	–	475,200	440,500	407,000	373,800	340,300	275,700	214,500	164,100
110°F Ambient										
K*DV015M4S*	3DS3R17ME	–	–	143,100	131,200	119,700	108,100	86,700	65,300	47,800
K*DV020M4S*	4DBNR20ME	–	–	173,000	158,200	144,500	131,600	106,000	83,100	62,900
K*DV025M4S*	4DHNR22ME	–	–	198,500	180,700	164,600	149,700	119,700	93,300	70,600
K*DV030M4S*	4DJNR28ME	–	–	233,200	214,100	194,900	176,400	142,700	110,600	82,900
K*DV035M4S*	6DHNR35ME	–	–	299,300	275,300	251,200	229,600	183,700	140,400	104,300
K*DV040M4S*	6DJNR40ME	–	–	346,900	320,000	293,100	267,300	213,300	164,300	123,300
K*DV050M4S*	6DUNR49ME	–	–	408,600	377,500	346,100	314,500	253,400	194,600	143,700

* Each asterisk represents a variable character based upon model and voltage ordered. See page 2 for nomenclature.

All capacities are calculated at 65°F return gas temperature and dew point values.

‡ Multiply capacity by .83 when used with 50 Hz power.

Head fan required.

Capacity Data (BTUH) - Med. Temp. R407C Discus - Single Compressor - 60 Hz‡

SUCTION TEMPERATURE

MODEL	COMP. MODEL	45	40	35	30	25	20	10	0	-10
90°F Ambient										
K*DV015M4S*	3DS3R17ME	190,700	176,000	161,800	149,600	137,900	127,100	105,500	85,600	68,600
K*DV020M4S*	4DBNR20ME	245,900	228,600	211,300	196,000	180,700	166,300	136,600	110,000	89,600
K*DV025M4S*	4DHNR22ME	258,600	240,600	222,500	206,800	190,300	175,200	144,700	117,100	93,900
K*DV030M4S*	4DJNR28ME	317,800	296,000	273,800	253,900	233,300	212,000	177,100	140,200	113,100
K*DV035M4S*	6DHNR35ME	388,500	356,700	326,600	300,900	276,000	253,000	209,400	169,400	134,800
K*DV040M4S*	6DJNR40ME	456,300	422,800	390,200	362,100	334,700	308,900	257,000	209,300	168,800
K*DV050M4S*	6DUNR49ME	535,700	499,700	462,600	431,300	399,200	368,800	305,700	249,900	207,500
95°F Ambient										
K*DV015M4S*	3DS3R17ME	183,300	168,800	155,000	143,300	132,300	122,000	101,100	81,800	65,400
K*DV020M4S*	4DBNR20ME	233,900	216,800	200,100	185,500	170,800	156,400	128,900	104,000	84,400
K*DV025M4S*	4DHNR22ME	245,700	228,300	210,500	195,800	180,300	165,100	136,300	110,000	89,300
K*DV030M4S*	4DJNR28ME	298,200	275,000	251,800	233,200	214,700	196,500	162,200	129,900	102,800
K*DV035M4S*	6DHNR35ME	368,800	337,700	309,600	285,500	261,900	240,700	198,200	160,100	126,500
K*DV040M4S*	6DJNR40ME	424,900	393,000	361,700	335,200	310,000	285,100	237,400	192,700	155,100
K*DV050M4S*	6DUNR49ME	499,800	465,500	430,800	401,100	371,100	340,800	283,800	231,200	191,200
100°F Ambient										
K*DV015M4S*	3DS3R17ME	–	161,600	148,400	137,200	126,500	116,000	96,700	78,200	62,400
K*DV020M4S*	4DBNR20ME	–	206,700	189,900	176,000	162,000	148,600	122,300	98,100	79,400
K*DV025M4S*	4DHNR22ME	–	216,000	199,300	184,700	170,800	155,800	128,700	103,100	83,500
K*DV030M4S*	4DJNR28ME	–	260,500	238,700	220,500	202,800	185,500	153,200	122,500	96,700
K*DV035M4S*	6DHNR35ME	–	320,400	292,800	269,600	247,700	226,300	187,200	150,300	118,600
K*DV040M4S*	6DJNR40ME	–	361,700	333,200	308,700	284,700	261,900	217,400	176,200	141,700
K*DV050M4S*	6DUNR49ME	–	430,600	398,500	370,500	342,000	314,200	261,300	212,200	175,300
110°F Ambient										
K*DV015M4S*	3DS3R17ME	–	–	135,000	124,700	114,900	105,300	87,600	70,900	56,300
K*DV020M4S*	4DBNR20ME	–	–	168,800	156,300	144,300	131,700	107,900	86,000	69,200
K*DV025M4S*	4DHNR22ME	–	–	178,300	165,300	151,800	138,600	113,400	90,800	72,600
K*DV030M4S*	4DJNR28ME	–	–	216,900	198,200	181,900	166,200	136,400	105,800	83,700
K*DV035M4S*	6DHNR35ME	–	–	263,900	243,400	223,700	203,900	167,600	133,800	104,600
K*DV040M4S*	6DJNR40ME	–	–	283,200	261,800	241,000	221,000	183,500	147,600	118,100
K*DV050M4S*	6DUNR49ME	–	–	345,400	320,600	295,100	270,600	223,500	178,100	148,100

* Each asterisk represents a variable character based upon model and voltage ordered. See page 2 for nomenclature.
All capacities are calculated at 65°F return gas temperature and dew point values.
‡ Multiply capacity by .83 when used with 50 Hz power.
Head fan required.

Capacity Data (BTUH) - Med. Temp. R448A, R449A/B Discus - Single Compressor - 60 Hz‡

SUCTION TEMPERATURE

MODEL	COMP. MODEL	45	40	35	30	25	20	10	0	-10
90°F Ambient										
K*DV015M4S*	3DS3R17ME	199,900	184,700	169,500	156,600	143,900	131,800	107,200	83,700	63,200
K*DV020M4S*	4DBNR20ME	260,700	239,400	218,400	200,300	183,400	167,500	136,900	108,100	83,300
K*DV025M4S*	4DHNR22ME	282,000	259,200	236,600	217,200	199,000	182,000	148,600	117,300	90,300
K*DV030M4S*	4DJNR28ME	333,200	307,900	283,000	261,300	240,100	220,100	179,400	138,400	100,900
K*DV035M4S*	6DHNR35ME	411,300	381,600	350,700	323,700	296,800	272,300	220,400	172,700	133,300
K*DV040M4S*	6DJNR40ME	476,600	442,300	407,100	376,400	346,500	315,800	257,800	201,700	155,700
K*DV050M4S*	6DUNR49ME	559,100	519,300	478,800	444,700	410,100	377,100	308,000	241,400	185,300
95°F Ambient										
K*DV015M4S*	3DS3R17ME	192,500	177,900	163,300	150,800	138,600	126,800	102,800	80,000	59,800
K*DV020M4S*	4DBNR20ME	251,700	230,700	209,700	192,800	176,500	161,200	131,300	103,400	79,300
K*DV025M4S*	4DHNR22ME	271,700	249,800	227,200	209,000	191,400	174,900	142,400	112,200	85,900
K*DV030M4S*	4DJNR28ME	318,500	293,900	269,800	249,300	229,000	209,800	169,400	130,900	94,800
K*DV035M4S*	6DHNR35ME	397,100	367,800	339,100	313,000	287,200	263,000	212,600	165,900	127,200
K*DV040M4S*	6DJNR40ME	461,400	428,800	394,500	365,900	335,900	306,100	249,500	194,700	150,700
K*DV050M4S*	6DUNR49ME	540,200	501,700	462,600	429,800	396,100	361,700	295,600	231,500	176,200
100°F Ambient										
K*DV015M4S*	3DS3R17ME	–	171,100	157,100	145,100	133,300	121,900	97,500	76,100	56,200
K*DV020M4S*	4DBNR20ME	–	222,000	201,700	185,300	169,500	154,600	125,400	98,700	75,400
K*DV025M4S*	4DHNR22ME	–	240,200	218,400	200,800	183,700	167,800	134,900	107,000	81,900
K*DV030M4S*	4DJNR28ME	–	282,200	259,300	239,200	219,600	200,700	162,200	124,500	89,600
K*DV035M4S*	6DHNR35ME	–	354,900	326,900	302,000	277,200	253,800	205,200	159,300	120,800
K*DV040M4S*	6DJNR40ME	–	412,300	379,400	352,000	323,100	294,700	239,400	186,100	142,700
K*DV050M4S*	6DUNR49ME	–	483,600	447,100	414,600	382,400	350,800	283,600	221,700	167,000
110°F Ambient										
K*DV015M4S*	3DS3R17ME	–	–	144,900	133,700	122,800	112,100	90,000	68,400	49,800
K*DV020M4S*	4DBNR20ME	–	–	185,700	170,300	155,300	141,500	114,900	89,100	67,100
K*DV025M4S*	4DHNR22ME	–	–	200,700	184,300	168,300	152,800	124,200	96,500	72,800
K*DV030M4S*	4DJNR28ME	–	–	236,300	217,600	199,700	181,300	146,100	111,300	78,900
K*DV035M4S*	6DHNR35ME	–	–	303,700	280,500	257,800	235,400	188,800	145,300	107,700
K*DV040M4S*	6DJNR40ME	–	–	352,800	326,200	299,600	274,500	220,600	170,100	127,600
K*DV050M4S*	6DUNR49ME	–	–	414,100	384,300	354,200	324,400	261,700	201,100	148,800

* Each asterisk represents a variable character based upon model and voltage ordered. See page 2 for nomenclature.

All capacities are calculated at 65°F return gas temperature and dew point values.

‡ Multiply capacity by .83 when used with 50 Hz power.

Head fan required.

Capacity Data (BTUH) - Med. Temp. R404A Discus - Dual Compressor - 60 Hz‡

SUCTION TEMPERATURE

MODEL	COMP. MODEL	45	40	35	30	25	20	10	0	-10
90°F Ambient										
K*DD030M4S*	(2) 3DS3R17ME	411,400	383,400	353,400	324,000	298,800	274,600	226,600	184,600	146,400
K*DD040M4S*	(2) 4DBNR20ME	516,400	484,600	449,200	413,400	381,200	349,600	285,800	230,600	186,200
K*DD050M4S*	(2) 4DHNR22ME	546,400	513,400	476,200	439,000	404,000	370,800	304,800	247,200	196,400
K*DD060M4S*	(2) 4DJNR28ME	686,800	645,800	599,200	551,200	506,400	458,800	381,600	302,800	242,000
K*DD070M4S*	(2) 6DHNR35ME	875,600	812,000	745,400	681,200	624,600	571,000	470,400	381,400	300,800
K*DD080M4S*	(2) 6DJNR40ME	968,600	906,400	838,800	772,000	713,600	656,600	543,800	443,800	354,800
K*DD100M4S*	(2) 6DUNR49ME	1,127,000	1,061,400	985,600	911,600	843,400	777,000	640,800	525,200	432,200
95°F Ambient										
K*DD030M4S*	(2) 3DS3R17ME	393,800	366,200	337,200	309,400	285,400	262,400	216,400	175,600	139,200
K*DD040M4S*	(2) 4DBNR20ME	494,200	462,800	428,400	393,800	362,600	331,200	271,600	219,400	176,600
K*DD050M4S*	(2) 4DHNR22ME	523,000	490,800	453,800	418,800	385,400	352,000	289,200	234,000	188,200
K*DD060M4S*	(2) 4DJNR28ME	644,600	600,200	551,200	506,400	466,200	425,400	349,400	280,600	220,000
K*DD070M4S*	(2) 6DHNR35ME	835,200	772,400	710,000	649,600	595,800	546,000	447,200	362,200	283,600
K*DD080M4S*	(2) 6DJNR40ME	928,200	867,000	800,200	735,600	680,400	623,600	516,800	420,600	335,400
K*DD100M4S*	(2) 6DUNR49ME	1,079,400	1,015,200	942,200	870,200	805,000	737,000	610,600	498,800	408,800
100°F Ambient										
K*DD030M4S*	(2) 3DS3R17ME	–	349,200	321,400	294,600	271,600	248,400	206,000	167,200	132,200
K*DD040M4S*	(2) 4DBNR20ME	–	442,600	408,000	375,000	345,000	315,600	258,400	208,000	166,800
K*DD050M4S*	(2) 4DHNR22ME	–	467,800	432,600	397,800	367,800	334,600	275,000	220,800	177,200
K*DD060M4S*	(2) 4DJNR28ME	–	571,200	524,600	481,000	442,200	403,400	331,200	265,800	207,800
K*DD070M4S*	(2) 6DHNR35ME	–	736,800	675,200	616,600	566,400	516,000	424,600	341,800	267,400
K*DD080M4S*	(2) 6DJNR40ME	–	826,000	763,000	701,400	646,600	593,000	490,000	398,200	317,200
K*DD100M4S*	(2) 6DUNR49ME	–	968,400	898,800	829,000	765,000	700,800	580,000	472,200	386,600
110°F Ambient										
K*DD030M4S*	(2) 3DS3R17ME	–	–	289,800	265,800	244,600	223,800	185,200	150,200	118,200
K*DD040M4S*	(2) 4DBNR20ME	–	–	366,800	337,000	311,000	283,000	230,800	184,400	147,000
K*DD050M4S*	(2) 4DHNR22ME	–	–	391,200	359,600	330,200	300,600	244,800	196,600	155,800
K*DD060M4S*	(2) 4DJNR28ME	–	–	475,200	430,600	395,200	360,000	294,000	228,600	179,200
K*DD070M4S*	(2) 6DHNR35ME	–	–	605,400	554,000	509,000	462,600	378,600	302,800	234,600
K*DD080M4S*	(2) 6DJNR40ME	–	–	687,400	630,400	580,200	530,600	438,200	353,600	280,400
K*DD100M4S*	(2) 6DUNR49ME	–	–	812,400	748,000	688,400	629,400	517,400	413,200	340,600

* Each asterisk represents a variable character based upon model and voltage ordered. See page 2 for nomenclature.

All capacities are calculated at 65°F return gas temperature and dew point values.

‡ Multiply capacity by .83 when used with 50 Hz power.

Swept wing fans improve air flow and diminish sound output

Stud mounted motors make for easier motor changes

Capacity Data (BTUH) - Med. Temp. R407A, R407F Discus - Dual Compressor - 60 Hz‡

SUCTION TEMPERATURE

MODEL	COMP. MODEL	45	40	35	30	25	20	10	0	-10
90°F Ambient										
K*DD030M4S*	(2) 3DS3R17ME	399,400	366,800	335,600	307,800	281,800	255,600	206,200	160,000	122,400
K*DD040M4S*	(2) 4DBNR20ME	488,200	447,200	407,800	374,200	343,000	314,400	255,600	202,600	157,200
K*DD050M4S*	(2) 4DHNR22ME	562,800	513,600	466,600	428,000	390,200	354,600	288,800	227,600	175,200
K*DD060M4S*	(2) 4DJNR28ME	660,600	601,800	553,800	509,800	466,400	424,200	344,000	266,600	198,400
K*DD070M4S*	(2) 6DHNR35ME	820,200	755,800	692,600	636,600	582,400	528,600	428,200	335,200	258,800
K*DD080M4S*	(2) 6DJNR40ME	949,200	876,600	803,200	738,600	678,800	617,000	500,400	391,200	302,800
K*DD100M4S*	(2) 6DUNR49ME	1,111,600	1,020,600	945,400	874,800	804,000	737,600	596,000	467,600	359,400
95°F Ambient										
K*DD030M4S*	(2) 3DS3R17ME	383,600	350,600	323,000	296,200	271,200	246,800	197,600	152,600	115,600
K*DD040M4S*	(2) 4DBNR20ME	470,200	426,400	392,200	359,600	329,600	301,400	244,800	193,800	149,600
K*DD050M4S*	(2) 4DHNR22ME	541,000	494,000	450,000	410,600	375,200	342,400	277,400	217,800	166,400
K*DD060M4S*	(2) 4DJNR28ME	635,000	582,800	532,600	489,600	447,400	407,400	330,000	255,200	189,600
K*DD070M4S*	(2) 6DHNR35ME	792,400	723,800	667,400	614,000	562,800	514,000	413,800	321,600	246,400
K*DD080M4S*	(2) 6DJNR40ME	916,800	847,400	778,000	715,600	655,400	599,400	483,000	375,600	290,000
K*DD100M4S*	(2) 6DUNR49ME	1,073,400	986,000	913,200	844,000	776,200	705,800	572,600	448,000	343,000
100°F Ambient										
K*DD030M4S*	(2) 3DS3R17ME	–	337,000	310,400	284,600	260,400	237,200	189,200	145,200	109,200
K*DD040M4S*	(2) 4DBNR20ME	–	410,200	376,800	345,200	316,000	288,600	233,600	184,600	141,600
K*DD050M4S*	(2) 4DHNR22ME	–	475,000	432,200	394,400	359,800	328,000	264,400	207,400	159,000
K*DD060M4S*	(2) 4DJNR28ME	–	559,400	510,800	469,600	428,800	388,800	314,800	244,200	181,800
K*DD070M4S*	(2) 6DHNR35ME	–	704,200	644,600	592,800	543,400	496,000	397,600	308,200	234,600
K*DD080M4S*	(2) 6DJNR40ME	–	809,600	748,400	690,000	631,400	573,800	464,800	359,800	275,200
K*DD100M4S*	(2) 6DUNR49ME	–	950,400	881,000	814,000	747,600	680,600	551,400	429,000	328,200
110°F Ambient										
K*DD030M4S*	(2) 3DS3R17ME	–	–	286,200	262,400	239,400	216,200	173,400	130,600	95,600
K*DD040M4S*	(2) 4DBNR20ME	–	–	346,000	316,400	289,000	263,200	212,000	166,200	125,800
K*DD050M4S*	(2) 4DHNR22ME	–	–	397,000	361,400	329,200	299,400	239,400	186,600	141,200
K*DD060M4S*	(2) 4DJNR28ME	–	–	466,400	428,200	389,800	352,800	285,400	221,200	165,800
K*DD070M4S*	(2) 6DHNR35ME	–	–	598,600	550,600	502,400	459,200	367,400	280,800	208,600
K*DD080M4S*	(2) 6DJNR40ME	–	–	693,800	640,000	586,200	534,600	426,600	328,600	246,600
K*DD100M4S*	(2) 6DUNR49ME	–	–	817,200	755,000	692,200	629,000	506,800	389,200	287,400

* Each asterisk represents a variable character based upon model and voltage ordered. See page 2 for nomenclature.

All capacities are calculated at 65°F return gas temperature and dew point values.

‡ Multiply capacity by .83 when used with 50 Hz power.

Head fan required.

Capacity Data (BTUH) - Med. Temp. R407C Discus - Dual Compressor - 60 Hz‡

SUCTION TEMPERATURE

MODEL	COMP. MODEL	45	40	35	30	25	20	10	0	-10
90°F Ambient										
K*DD030M4S*	(2) 3DS3R17ME	381,400	352,000	323,600	299,200	275,800	254,200	211,000	171,200	137,200
K*DD040M4S*	(2) 4DBNR20ME	491,800	457,200	422,600	392,000	361,400	332,600	273,200	220,000	179,200
K*DD050M4S*	(2) 4DHNR22ME	517,200	481,200	445,000	413,600	380,600	350,400	289,400	234,200	187,800
K*DD060M4S*	(2) 4DJNR28ME	635,600	592,000	547,600	507,800	466,600	424,000	354,200	280,400	226,200
K*DD070M4S*	(2) 6DHNR35ME	777,000	713,400	653,200	601,800	552,000	506,000	418,800	338,800	269,600
K*DD080M4S*	(2) 6DJNR40ME	912,600	845,600	780,400	724,200	669,400	617,800	514,000	418,600	337,600
K*DD100M4S*	(2) 6DUNR49ME	1,071,400	999,400	925,200	862,600	798,400	737,600	611,400	499,800	415,000
95°F Ambient										
K*DD030M4S*	(2) 3DS3R17ME	366,600	337,600	310,000	286,600	264,600	244,000	202,200	163,600	130,800
K*DD040M4S*	(2) 4DBNR20ME	467,800	433,600	400,200	371,000	341,600	312,800	257,800	208,000	168,800
K*DD050M4S*	(2) 4DHNR22ME	491,400	456,600	421,000	391,600	360,600	330,200	272,600	220,000	178,600
K*DD060M4S*	(2) 4DJNR28ME	596,400	550,000	503,600	466,400	429,400	393,000	324,400	259,800	205,600
K*DD070M4S*	(2) 6DHNR35ME	737,600	675,400	619,200	571,000	523,800	481,400	396,400	320,200	253,000
K*DD080M4S*	(2) 6DJNR40ME	849,800	786,000	723,400	670,400	620,000	570,200	474,800	385,400	310,200
K*DD100M4S*	(2) 6DUNR49ME	999,600	931,000	861,600	802,200	742,200	681,600	567,600	462,400	382,400
100°F Ambient										
K*DD030M4S*	(2) 3DS3R17ME	–	323,200	296,800	274,400	253,000	232,000	193,400	156,400	124,800
K*DD040M4S*	(2) 4DBNR20ME	–	413,400	379,800	352,000	324,000	297,200	244,600	196,200	158,800
K*DD050M4S*	(2) 4DHNR22ME	–	432,000	398,600	369,400	341,600	311,600	257,400	206,200	167,000
K*DD060M4S*	(2) 4DJNR28ME	–	521,000	477,400	441,000	405,600	371,000	306,400	245,000	193,400
K*DD070M4S*	(2) 6DHNR35ME	–	640,800	585,600	539,200	495,400	452,600	374,400	300,600	237,200
K*DD080M4S*	(2) 6DJNR40ME	–	723,400	666,400	617,400	569,400	523,800	434,800	352,400	283,400
K*DD100M4S*	(2) 6DUNR49ME	–	861,200	797,000	741,000	684,000	628,400	522,600	424,400	350,600
110°F Ambient										
K*DD030M4S*	(2) 3DS3R17ME	–	–	270,000	249,400	229,800	210,600	175,200	141,800	112,600
K*DD040M4S*	(2) 4DBNR20ME	–	–	337,600	312,600	288,600	263,400	215,800	172,000	138,400
K*DD050M4S*	(2) 4DHNR22ME	–	–	356,600	330,600	303,600	277,200	226,800	181,600	145,200
K*DD060M4S*	(2) 4DJNR28ME	–	–	433,800	396,400	363,800	332,400	272,800	211,600	167,400
K*DD070M4S*	(2) 6DHNR35ME	–	–	527,800	486,800	447,400	407,800	335,200	267,600	209,200
K*DD080M4S*	(2) 6DJNR40ME	–	–	566,400	523,600	482,000	442,000	367,000	295,200	236,200
K*DD100M4S*	(2) 6DUNR49ME	–	–	690,800	641,200	590,200	541,200	447,000	356,200	296,200

* Each asterisk represents a variable character based upon model and voltage ordered. See page 2 for nomenclature.

All capacities are calculated at 65°F return gas temperature and dew point values.

‡ Multiply capacity by .83 when used with 50 Hz power.

Head fan required.

Capacity Data (BTUH) - Med. Temp. R448A, R449A/B Discus - Dual Compressor - 60 Hz‡

SUCTION TEMPERATURE

MODEL	COMP. MODEL	45	40	35	30	25	20	10	0	-10
90°F Ambient										
K*DD030M4S*	(2) 3DS3R17ME	399,800	369,400	339,000	313,200	287,800	263,600	214,400	167,400	126,400
K*DD040M4S*	(2) 4DBNR20ME	521,400	478,800	436,800	400,600	366,800	335,000	273,800	216,200	166,600
K*DD050M4S*	(2) 4DHNR22ME	564,000	518,400	473,200	434,400	398,000	364,000	297,200	234,600	180,600
K*DD060M4S*	(2) 4DJNR28ME	666,400	615,800	566,000	522,600	480,200	440,200	358,800	276,800	201,800
K*DD070M4S*	(2) 6DHNR35ME	822,600	763,200	701,400	647,400	593,600	544,600	440,800	345,400	266,600
K*DD080M4S*	(2) 6DJNR40ME	953,200	884,600	814,200	752,800	693,000	631,600	515,600	403,400	311,400
K*DD100M4S*	(2) 6DUNR49ME	1,118,200	1,038,600	957,600	889,400	820,200	754,200	616,000	482,800	370,600
95°F Ambient										
K*DD030M4S*	(2) 3DS3R17ME	385,000	355,800	326,600	301,600	277,200	253,600	205,600	160,000	119,600
K*DD040M4S*	(2) 4DBNR20ME	503,400	461,400	419,400	385,600	353,000	322,400	262,600	206,800	158,600
K*DD050M4S*	(2) 4DHNR22ME	543,400	499,600	454,400	418,000	382,800	349,800	284,800	224,400	171,800
K*DD060M4S*	(2) 4DJNR28ME	637,000	587,800	539,600	498,600	458,000	419,600	338,800	261,800	189,600
K*DD070M4S*	(2) 6DHNR35ME	794,200	735,600	678,200	626,000	574,400	526,000	425,200	331,800	254,400
K*DD080M4S*	(2) 6DJNR40ME	922,800	857,600	789,000	731,800	671,800	612,200	499,000	389,400	301,400
K*DD100M4S*	(2) 6DUNR49ME	1,080,400	1,003,400	925,200	859,600	792,200	723,400	591,200	463,000	352,400
100°F Ambient										
K*DD030M4S*	(2) 3DS3R17ME	–	342,200	314,200	290,200	266,600	243,800	195,000	152,200	112,400
K*DD040M4S*	(2) 4DBNR20ME	–	444,000	403,400	370,600	339,000	309,200	250,800	197,400	150,800
K*DD050M4S*	(2) 4DHNR22ME	–	480,400	436,800	401,600	367,400	335,600	269,800	214,000	163,800
K*DD060M4S*	(2) 4DJNR28ME	–	564,400	518,600	478,400	439,200	401,400	324,400	249,000	179,200
K*DD070M4S*	(2) 6DHNR35ME	–	709,800	653,800	604,000	554,400	507,600	410,400	318,600	241,600
K*DD080M4S*	(2) 6DJNR40ME	–	824,600	758,800	704,000	646,200	589,400	478,800	372,200	285,400
K*DD100M4S*	(2) 6DUNR49ME	–	967,200	894,200	829,200	764,800	701,600	567,200	443,400	334,000
110°F Ambient										
K*DD030M4S*	(2) 3DS3R17ME	–	–	289,800	267,400	245,600	224,200	180,000	136,800	99,600
K*DD040M4S*	(2) 4DBNR20ME	–	–	371,400	340,600	310,600	283,000	229,800	178,200	134,200
K*DD050M4S*	(2) 4DHNR22ME	–	–	401,400	368,600	336,600	305,600	248,400	193,000	145,600
K*DD060M4S*	(2) 4DJNR28ME	–	–	472,600	435,200	399,400	362,600	292,200	222,600	157,800
K*DD070M4S*	(2) 6DHNR35ME	–	–	607,400	561,000	515,600	470,800	377,600	290,600	215,400
K*DD080M4S*	(2) 6DJNR40ME	–	–	705,600	652,400	599,200	549,000	441,200	340,200	255,200
K*DD100M4S*	(2) 6DUNR49ME	–	–	828,200	768,600	708,400	648,800	523,400	402,200	297,600

* Each asterisk represents a variable character based upon model and voltage ordered. See page 2 for nomenclature.

All capacities are calculated at 65°F return gas temperature and dew point values.

‡ Multiply capacity by .83 when used with 50 Hz power.

Head fan required.

Capacity Data (BTUH) - Med. Temp. R404A Discus - Parallel Compressor - 60 Hz‡

SUCTION TEMPERATURE

MODEL	COMP. MODEL	45	40	35	30	25	20	10	0	-10
90°F Ambient										
K*DP050M4S*	(2) 4DHNR22ME	546,400	513,400	476,200	439,000	404,000	370,800	304,800	247,200	196,400
K*DP060M4S*	(2) 4DJNR28ME	686,800	645,800	599,200	551,200	506,400	458,800	381,600	302,800	242,000
K*DP070M4S*	(2) 6DHNR35ME	875,600	812,000	745,400	681,200	624,600	571,000	470,400	381,400	300,800
K*DP080M4S*	(2) 6DJNR40ME	968,600	906,400	838,800	772,000	713,600	656,600	543,800	443,800	354,800
K*DP100M4S*	(2) 6DUNR49ME	1,127,000	1,061,400	985,600	911,600	843,400	777,000	640,800	525,200	432,200
95°F Ambient										
K*DP050M4S*	(2) 4DHNR22ME	523,000	490,800	453,800	418,800	385,400	352,000	289,200	234,000	188,200
K*DP060M4S*	(2) 4DJNR28ME	644,600	600,200	551,200	506,400	466,200	425,400	349,400	280,600	220,000
K*DP070M4S*	(2) 6DHNR35ME	835,200	772,400	710,000	649,600	595,800	546,000	447,200	362,200	283,600
K*DP080M4S*	(2) 6DJNR40ME	928,200	867,000	800,200	735,600	680,400	623,600	516,800	420,600	335,400
K*DP100M4S*	(2) 6DUNR49ME	1,079,400	1,015,200	942,200	870,200	805,000	737,000	610,600	498,800	408,800
100°F Ambient										
K*DP050M4S*	(2) 4DHNR22ME	–	467,800	432,600	397,800	367,800	334,600	275,000	220,800	177,200
K*DP060M4S*	(2) 4DJNR28ME	–	571,200	524,600	481,000	442,200	403,400	331,200	265,800	207,800
K*DP070M4S*	(2) 6DHNR35ME	–	736,800	675,200	616,600	566,400	516,000	424,600	341,800	267,400
K*DP080M4S*	(2) 6DJNR40ME	–	826,000	763,000	701,400	646,600	593,000	490,000	398,200	317,200
K*DP100M4S*	(2) 6DUNR49ME	–	968,400	898,800	829,000	765,000	700,800	580,000	472,200	386,600
110°F Ambient										
K*DP050M4S*	(2) 4DHNR22ME	–	–	391,200	359,600	330,200	300,600	244,800	196,600	155,800
K*DP060M4S*	(2) 4DJNR28ME	–	–	475,200	430,600	395,200	360,000	294,000	228,600	179,200
K*DP070M4S*	(2) 6DHNR35ME	–	–	605,400	554,000	509,000	462,600	378,600	302,800	234,600
K*DP080M4S*	(2) 6DJNR40ME	–	–	687,400	630,400	580,200	530,600	438,200	353,600	280,400
K*DP100M4S*	(2) 6DUNR49ME	–	–	812,400	748,000	688,400	629,400	517,400	413,200	340,600

Capacity Data (BTUH) - Med. Temp. R407A, R407F Discus - Parallel Compressor - 60 Hz‡

SUCTION TEMPERATURE

MODEL	COMP. MODEL	45	40	35	30	25	20	10	0	-10
90°F Ambient										
K*DP050M4S*	(2) 4DHNR22ME	562,800	513,600	466,600	428,000	390,200	354,600	288,800	227,600	175,200
K*DP060M4S*	(2) 4DJNR28ME	660,600	601,800	553,800	509,800	466,400	424,200	344,000	266,600	198,400
K*DP070M4S*	(2) 6DHNR35ME	820,200	755,800	692,600	636,600	582,400	528,600	428,200	335,200	258,800
K*DP080M4S*	(2) 6DJNR40ME	949,200	876,600	803,200	738,600	678,800	617,000	500,400	391,200	302,800
K*DP100M4S*	(2) 6DUNR49ME	1,111,600	1,020,600	945,400	874,800	804,000	737,600	596,000	467,600	359,400
95°F Ambient										
K*DP050M4S*	(2) 4DHNR22ME	541,000	494,000	450,000	410,600	375,200	342,400	277,400	217,800	166,400
K*DP060M4S*	(2) 4DJNR28ME	635,000	582,800	532,600	489,600	447,400	407,400	330,000	255,200	189,600
K*DP070M4S*	(2) 6DHNR35ME	792,400	723,800	667,400	614,000	562,800	514,000	413,800	321,600	246,400
K*DP080M4S*	(2) 6DJNR40ME	916,800	847,400	778,000	715,600	655,400	599,400	483,000	375,600	290,000
K*DP100M4S*	(2) 6DUNR49ME	1,073,400	986,000	913,200	844,000	776,200	705,800	572,600	448,000	343,000
100°F Ambient										
K*DP050M4S*	(2) 4DHNR22ME	–	475,000	432,200	394,400	359,800	328,000	264,400	207,400	159,000
K*DP060M4S*	(2) 4DJNR28ME	–	559,400	510,800	469,600	428,800	388,800	314,800	244,200	181,800
K*DP070M4S*	(2) 6DHNR35ME	–	704,200	644,600	592,800	543,400	496,000	397,600	308,200	234,600
K*DP080M4S*	(2) 6DJNR40ME	–	809,600	748,400	690,000	631,400	573,800	464,800	359,800	275,200
K*DP100M4S*	(2) 6DUNR49ME	–	950,400	881,000	814,000	747,600	680,600	551,400	429,000	328,200
110°F Ambient										
K*DP050M4S*	(2) 4DHNR22ME	–	–	397,000	361,400	329,200	299,400	239,400	186,600	141,200
K*DP060M4S*	(2) 4DJNR28ME	–	–	466,400	428,200	389,800	352,800	285,400	221,200	165,800
K*DP070M4S*	(2) 6DHNR35ME	–	–	598,600	550,600	502,400	459,200	367,400	280,800	208,600
K*DP080M4S*	(2) 6DJNR40ME	–	–	693,800	640,000	586,200	534,600	426,600	328,600	246,600
K*DP100M4S*	(2) 6DUNR49ME	–	–	817,200	755,000	692,200	629,000	506,800	389,200	287,400

See notes on page 11.

Capacity Data (BTUH) - Med. Temp. R407C Discus - Parallel Compressor - 60 Hz‡

SUCTION TEMPERATURE

MODEL	COMP. MODEL	45	40	35	30	25	20	10	0	-10
90°F Ambient										
K*DP050M4S*	(2) 4DHNR22ME	517,200	481,200	445,000	413,600	380,600	350,400	289,400	234,200	187,800
K*DP060M4S*	(2) 4DJNR28ME	635,600	592,000	547,600	507,800	466,600	424,000	354,200	280,400	226,200
K*DP070M4S*	(2) 6DHNR35ME	777,000	713,400	653,200	601,800	552,000	506,000	418,800	338,800	269,600
K*DP080M4S*	(2) 6DJNR40ME	912,600	845,600	780,400	724,200	669,400	617,800	514,000	418,600	337,600
K*DP100M4S*	(2) 6DUNR49ME	1,071,400	999,400	925,200	862,600	798,400	737,600	611,400	499,800	415,000
95°F Ambient										
K*DP050M4S*	(2) 4DHNR22ME	491,400	456,600	421,000	391,600	360,600	330,200	272,600	220,000	178,600
K*DP060M4S*	(2) 4DJNR28ME	596,400	550,000	503,600	466,400	429,400	393,000	324,400	259,800	205,600
K*DP070M4S*	(2) 6DHNR35ME	737,600	675,400	619,200	571,000	523,800	481,400	396,400	320,200	253,000
K*DP080M4S*	(2) 6DJNR40ME	849,800	786,000	723,400	670,400	620,000	570,200	474,800	385,400	310,200
K*DP100M4S*	(2) 6DUNR49ME	999,600	931,000	861,600	802,200	742,200	681,600	567,600	462,400	382,400
100°F Ambient										
K*DP050M4S*	(2) 4DHNR22ME	–	432,000	398,600	369,400	341,600	311,600	257,400	206,200	167,000
K*DP060M4S*	(2) 4DJNR28ME	–	521,000	477,400	441,000	405,600	371,000	306,400	245,000	193,400
K*DP070M4S*	(2) 6DHNR35ME	–	640,800	585,600	539,200	495,400	452,600	374,400	300,600	237,200
K*DP080M4S*	(2) 6DJNR40ME	–	723,400	666,400	617,400	569,400	523,800	434,800	352,400	283,400
K*DP100M4S*	(2) 6DUNR49ME	–	861,200	797,000	741,000	684,000	628,400	522,600	424,400	350,600
110°F Ambient										
K*DP050M4S*	(2) 4DHNR22ME	–	–	356,600	330,600	303,600	277,200	226,800	181,600	145,200
K*DP060M4S*	(2) 4DJNR28ME	–	–	433,800	396,400	363,800	332,400	272,800	211,600	167,400
K*DP070M4S*	(2) 6DHNR35ME	–	–	527,800	486,800	447,400	407,800	335,200	267,600	209,200
K*DP080M4S*	(2) 6DJNR40ME	–	–	566,400	523,600	482,000	442,000	367,000	295,200	236,200
K*DP100M4S*	(2) 6DUNR49ME	–	–	690,800	641,200	590,200	541,200	447,000	356,200	296,200

Capacity Data (BTUH) - Med. Temp. R448A, R449A/B Discus - Parallel Compressor - 60 Hz‡

SUCTION TEMPERATURE

MODEL	COMP. MODEL	45	40	35	30	25	20	10	0	-10
90°F Ambient										
K*DP050M4S*	(2) 4DHNR22ME	564,000	518,400	473,200	434,400	398,000	364,000	297,200	234,600	180,600
K*DP060M4S*	(2) 4DJNR28ME	666,400	615,800	566,000	522,600	480,200	440,200	358,800	276,800	201,800
K*DP070M4S*	(2) 6DHNR35ME	822,600	763,200	701,400	647,400	593,600	544,600	440,800	345,400	266,600
K*DP080M4S*	(2) 6DJNR40ME	953,200	884,600	814,200	752,800	693,000	631,600	515,600	403,400	311,400
K*DP100M4S*	(2) 6DUNR49ME	1,118,200	1,038,600	957,600	889,400	820,200	754,200	616,000	482,800	370,600
95°F Ambient										
K*DP050M4S*	(2) 4DHNR22ME	543,400	499,600	454,400	418,000	382,800	349,800	284,800	224,400	171,800
K*DP060M4S*	(2) 4DJNR28ME	637,000	587,800	539,600	498,600	458,000	419,600	338,800	261,800	189,600
K*DP070M4S*	(2) 6DHNR35ME	794,200	735,600	678,200	626,000	574,400	526,000	425,200	331,800	254,400
K*DP080M4S*	(2) 6DJNR40ME	922,800	857,600	789,000	731,800	671,800	612,200	499,000	389,400	301,400
K*DP100M4S*	(2) 6DUNR49ME	1,080,400	1,003,400	925,200	859,600	792,200	723,400	591,200	463,000	352,400
100°F Ambient										
K*DP050M4S*	(2) 4DHNR22ME	–	480,400	436,800	401,600	367,400	335,600	269,800	214,000	163,800
K*DP060M4S*	(2) 4DJNR28ME	–	564,400	518,600	478,400	439,200	401,400	324,400	249,000	179,200
K*DP070M4S*	(2) 6DHNR35ME	–	709,800	653,800	604,000	554,400	507,600	410,400	318,600	241,600
K*DP080M4S*	(2) 6DJNR40ME	–	824,600	758,800	704,000	646,200	589,400	478,800	372,200	285,400
K*DP100M4S*	(2) 6DUNR49ME	–	967,200	894,200	829,200	764,800	701,600	567,200	443,400	334,000
110°F Ambient										
K*DP050M4S*	(2) 4DHNR22ME	–	–	401,400	368,600	336,600	305,600	248,400	193,000	145,600
K*DP060M4S*	(2) 4DJNR28ME	–	–	472,600	435,200	399,400	362,600	292,200	222,600	157,800
K*DP070M4S*	(2) 6DHNR35ME	–	–	607,400	561,000	515,600	470,800	377,600	290,600	215,400
K*DP080M4S*	(2) 6DJNR40ME	–	–	705,600	652,400	599,200	549,000	441,200	340,200	255,200
K*DP100M4S*	(2) 6DUNR49ME	–	–	828,200	768,600	708,400	648,800	523,400	402,200	297,600

See notes on page 11.

Capacity Data (BTUH) - Low Temp. R404A Discus - Single Compressor - 60 Hz‡

SUCTION TEMPERATURE

MODEL	COMP. MODEL	0	-5	-10	-15	-20	-25	-30	-35	-40
90°F Ambient										
K*DV022L4S*	4DJNF76KE	132,500	122,000	110,600	100,100	89,900	79,600	69,500	60,400	50,800
K*DV027L4S*	6DHNF93KE	172,300	157,700	141,900	127,400	113,600	99,600	86,400	74,900	64,100
K*DV030L4S*	6DJNF11ME	187,900	172,000	154,800	138,800	123,600	109,300	95,700	82,600	71,300
K*DV040L4S*	6DUNF13ME	235,800	214,600	193,400	175,400	158,700	141,400	124,500	108,300	90,700
95°F Ambient										
K*DV022L4S*	4DJNF76KE	126,200	114,500	104,700	94,500	84,800	74,600	64,900	56,400	47,900
K*DV027L4S*	6DHNF93KE	163,400	149,700	134,600	120,100	107,500	93,700	80,700	69,600	59,200
K*DV030L4S*	6DJNF11ME	178,500	162,900	146,400	130,500	117,300	102,700	88,900	76,800	66,100
K*DV040L4S*	6DUNF13ME	223,900	203,200	182,600	165,100	148,900	132,300	117,600	100,900	83,200
100°F Ambient										
K*DV022L4S*	4DJNF76KE	119,400	109,500	98,900	88,600	79,600	69,900	60,400	51,700	42,200
K*DV027L4S*	6DHNF93KE	155,000	141,900	127,400	113,900	101,200	87,900	75,300	64,000	53,500
K*DV030L4S*	6DJNF11ME	168,600	153,700	138,100	123,500	110,200	96,600	83,300	71,800	60,800
K*DV040L4S*	6DUNF13ME	212,700	191,900	172,600	155,000	139,500	123,500	106,100	90,600	72,700
110°F Ambient										
K*DV022L4S*	4DJNF76KE	106,700	97,400	87,500	78,400	69,500	60,700	51,500	43,300	34,600
K*DV027L4S*	6DHNF93KE	139,400	126,900	113,400	100,700	88,300	75,900	64,100	53,600	43,400
K*DV030L4S*	6DJNF11ME	150,200	136,500	122,300	108,800	95,800	84,200	71,900	61,700	50,200
K*DV040L4S*	6DUNF13ME	189,600	169,100	151,700	134,700	120,300	105,500	87,700	72,900	54,600

Capacity Data (BTUH) - Low Temp. R407A, R407F Discus - Single Compressor - 60 Hz‡

SUCTION TEMPERATURE

MODEL	COMP. MODEL	0	-5	-10	-15	-20	-25	-30	-35	-40
90°F Ambient										
K*DV022L4S*	4DJNF76KE	128,400	115,400	101,800	89,200	79,400	69,100	60,100	51,100	43,800
K*DV027L4S*	6DHNF93KE	155,900	140,600	125,000	109,900	97,900	84,200	71,400	59,900	50,400
K*DV030L4S*	6DJNF11ME	174,100	158,000	140,800	124,500	111,300	96,100	81,600	69,600	57,000
K*DV040L4S*	6DUNF13ME	214,000	195,700	176,000	156,100	139,000	120,800	102,500	85,800	71,200
95°F Ambient										
K*DV022L4S*	4DJNF76KE	123,000	110,300	97,200	84,900	75,500	65,600	57,100	47,600	38,700
K*DV027L4S*	6DHNF93KE	149,700	134,700	119,600	104,800	93,000	79,600	67,100	56,400	48,100
K*DV030L4S*	6DJNF11ME	166,600	151,000	134,300	118,300	105,200	90,300	76,400	64,600	56,200
K*DV040L4S*	6DUNF13ME	205,800	187,800	167,800	148,300	130,300	111,800	95,500	79,300	64,200
100°F Ambient										
K*DV022L4S*	4DJNF76KE	117,400	105,100	92,500	80,600	71,400	61,900	54,000	44,100	35,400
K*DV027L4S*	6DHNF93KE	143,700	128,800	114,000	99,500	87,800	74,900	62,300	52,300	43,800
K*DV030L4S*	6DJNF11ME	158,900	142,300	127,400	112,000	99,200	84,400	70,700	58,800	51,000
K*DV040L4S*	6DUNF13ME	199,600	181,500	160,800	141,900	123,600	105,400	88,100	69,900	56,700
110°F Ambient										
K*DV022L4S*	4DJNF76KE	106,400	94,600	82,800	72,300	63,100	54,400	46,800	37,000	28,800
K*DV027L4S*	6DHNF93KE	130,100	115,300	101,900	88,300	76,900	64,400	51,900	43,200	34,800
K*DV030L4S*	6DJNF11ME	142,800	127,200	113,100	98,400	86,100	71,900	60,000	48,500	40,200
K*DV040L4S*	6DUNF13ME	182,100	165,300	146,300	128,100	111,400	91,800	75,000	58,500	45,000

* Each asterisk represents a variable character based upon model and voltage ordered. See page 2 for nomenclature.
All capacities are calculated at 65°F return gas temperature and dew point values.
Head fan required on R404A below -25°F.
Demand cooling required on R407A, R407C, R407F, R448A and R449A/B.
‡ Multiply capacity by .83 when used with 50 Hz power.

Capacity Data (BTUH) - Low Temp. R407C Discus - Single Compressor - 60 Hz‡

SUCTION TEMPERATURE

MODEL	COMP. MODEL	0	-5	-10	-15	-20	-25	-30	-35	-40
90°F Ambient										
K*DV022L4S*	4DJNF76KE	109,600	100,900	91,500	82,800	74,400	65,900	57,500	50,000	42,000
K*DV027L4S*	6DHNF93KE	144,700	132,400	119,100	107,000	95,400	83,600	72,500	62,900	53,800
K*DV030L4S*	6DJNF11ME	165,300	151,300	136,200	122,100	108,700	96,100	84,200	72,700	62,700
K*DV040L4S*	6DUNF13ME	208,700	189,900	171,100	155,200	140,400	125,100	110,200	95,800	80,300
95°F Ambient										
K*DV022L4S*	4DJNF76KE	105,500	95,700	87,500	79,000	70,900	62,300	54,200	47,100	40,000
K*DV027L4S*	6DHNF93KE	137,000	125,600	112,900	100,700	90,200	78,600	67,700	58,400	49,700
K*DV030L4S*	6DJNF11ME	157,800	144,000	129,400	115,400	103,700	90,800	78,600	67,900	58,400
K*DV040L4S*	6DUNF13ME	192,300	174,500	156,800	141,800	127,900	113,600	101,000	86,700	71,500
100°F Ambient										
K*DV022L4S*	4DJNF76KE	103,800	95,200	86,000	77,100	69,200	60,800	52,500	45,000	36,700
K*DV027L4S*	6DHNF93KE	134,700	123,300	110,700	99,000	87,900	76,400	65,400	55,600	46,500
K*DV030L4S*	6DJNF11ME	154,500	140,800	126,500	113,200	101,000	88,500	76,300	65,800	55,700
K*DV040L4S*	6DUNF13ME	192,200	173,400	156,000	140,100	126,100	111,600	95,900	81,900	65,700
110°F Ambient										
K*DV022L4S*	4DJNF76KE	94,900	86,600	77,800	69,700	61,800	54,000	45,800	38,500	30,800
K*DV027L4S*	6DHNF93KE	121,800	110,900	99,100	88,000	77,200	66,300	56,000	46,800	37,900
K*DV030L4S*	6DJNF11ME	140,100	127,300	114,100	101,500	89,300	78,500	67,100	57,500	46,800
K*DV040L4S*	6DUNF13ME	181,300	161,700	145,000	128,800	115,000	100,900	83,800	69,700	52,200

Capacity Data (BTUH) - Low Temp. R448A, R449A/B Discus - Single Compressor - 60 Hz‡

SUCTION TEMPERATURE

MODEL	COMP. MODEL	0	-5	-10	-15	-20	-25	-30	-35	-40
90°F Ambient										
K*DV022L4S*	4DJNF76KE	130,800	117,800	104,700	93,200	82,600	71,800	61,700	52,200	42,100
K*DV027L4S*	6DHNF93KE	153,700	139,000	123,800	110,000	97,300	84,300	72,100	60,500	49,800
K*DV030L4S*	6DJNF11ME	179,000	162,500	145,100	128,900	114,600	99,500	85,000	71,100	56,600
K*DV040L4S*	6DUNF13ME	219,400	200,700	179,500	159,200	140,700	122,200	105,000	86,400	70,800
95°F Ambient										
K*DV022L4S*	4DJNF76KE	125,500	112,900	100,200	88,300	78,300	67,700	57,700	48,400	37,800
K*DV027L4S*	6DHNF93KE	147,300	133,000	118,200	104,800	92,300	79,500	67,500	55,800	44,800
K*DV030L4S*	6DJNF11ME	171,700	155,400	138,300	122,400	108,500	93,800	79,600	65,200	50,000
K*DV040L4S*	6DUNF13ME	212,000	193,600	172,900	153,500	134,600	115,800	98,900	79,300	64,800
100°F Ambient										
K*DV022L4S*	4DJNF76KE	120,400	107,800	95,300	83,800	73,900	64,400	53,600	43,800	34,700
K*DV027L4S*	6DHNF93KE	140,700	126,700	112,400	99,300	87,000	74,400	62,600	50,800	38,600
K*DV030L4S*	6DJNF11ME	163,400	146,000	131,200	115,700	101,900	87,300	73,300	59,800	45,700
K*DV040L4S*	6DUNF13ME	204,100	184,200	166,000	146,000	127,700	109,400	91,900	69,900	54,600
110°F Ambient										
K*DV022L4S*	4DJNF76KE	109,500	97,700	85,800	75,100	65,100	54,800	45,100	36,700	25,800
K*DV027L4S*	6DHNF93KE	126,900	113,800	100,100	87,600	75,700	63,500	51,000	40,500	30,600
K*DV030L4S*	6DJNF11ME	147,300	132,500	116,700	102,200	88,500	74,200	59,600	47,000	36,600
K*DV040L4S*	6DUNF13ME	188,500	170,900	151,000	131,900	113,300	94,800	77,300	58,800	42,000

* Each asterisk represents a variable character based upon model and voltage ordered. See page 2 for nomenclature.
All capacities are calculated at 65°F return gas temperature and dew point values.
Demand cooling required on R407A, R407C, R407F, R448A and R449A/B.
‡ Multiply capacity by .83 when used with 50 Hz power.

Capacity Data (BTUH) - Low Temp. R404A Discus - Dual / Parallel Compressors - 60 Hz‡

SUCTION TEMPERATURE

DUAL MODEL	PARALLEL MODEL	COMP. MODEL	0	-5	-10	-15	-20	-25	-30	-35	-40
90°F Ambient											
K*DD044L4S*	K*DP044L4S*	(2) 4DJNF76KE	265,000	244,000	221,200	200,200	179,800	159,200	139,000	120,800	101,600
K*DD054L4S*	K*DP054L4S*	(2) 6DHNF93KE	344,600	315,400	283,800	254,800	227,200	199,200	172,800	149,800	128,200
K*DD060L4S*	K*DP060L4S*	(2) 6DJNF11ME	375,800	344,000	309,600	277,600	247,200	218,600	191,400	165,200	142,600
K*DD080L4S*	K*DP080L4S*	(2) 6DUNF13ME	471,600	429,200	386,800	350,800	317,400	282,800	249,000	216,600	181,400
95°F Ambient											
K*DD044L4S*	K*DP044L4S*	(2) 4DJNF76KE	252,400	229,000	209,400	189,000	169,600	149,200	129,800	112,800	95,800
K*DD054L4S*	K*DP054L4S*	(2) 6DHNF93KE	326,800	299,400	269,200	240,200	215,000	187,400	161,400	139,200	118,400
K*DD060L4S*	K*DP060L4S*	(2) 6DJNF11ME	357,000	325,800	292,800	261,000	234,600	205,400	177,800	153,600	132,200
K*DD080L4S*	K*DP080L4S*	(2) 6DUNF13ME	447,800	406,400	365,200	330,200	297,800	264,600	235,200	201,800	166,400
100°F Ambient											
K*DD044L4S*	K*DP044L4S*	(2) 4DJNF76KE	238,800	219,000	197,800	177,200	159,200	139,800	120,800	103,400	84,400
K*DD054L4S*	K*DP054L4S*	(2) 6DHNF93KE	310,000	283,800	254,800	227,800	202,400	175,800	150,600	128,000	107,000
K*DD060L4S*	K*DP060L4S*	(2) 6DJNF11ME	337,200	307,400	276,200	247,000	220,400	193,200	166,600	143,600	121,600
K*DD080L4S*	K*DP080L4S*	(2) 6DUNF13ME	425,400	383,800	345,200	310,000	279,000	247,000	212,200	181,200	145,400
110°F Ambient											
K*DD044L4S*	K*DP044L4S*	(2) 4DJNF76KE	213,400	194,800	175,000	156,800	139,000	121,400	103,000	86,600	69,200
K*DD054L4S*	K*DP054L4S*	(2) 6DHNF93KE	278,800	253,800	226,800	201,400	176,600	151,800	128,200	107,200	86,800
K*DD060L4S*	K*DP060L4S*	(2) 6DJNF11ME	300,400	273,000	244,600	217,600	191,600	168,400	143,800	123,400	100,400
K*DD080L4S*	K*DP080L4S*	(2) 6DUNF13ME	379,200	338,200	303,400	269,400	240,600	211,000	175,400	145,800	109,200

Capacity Data (BTUH) - Low Temp. R407A, R407F Discus - Dual / Parallel Compressors - 60 Hz‡

SUCTION TEMPERATURE

DUAL MODEL	PARALLEL MODEL	COMP. MODEL	0	-5	-10	-15	-20	-25	-30	-35	-40
90°F Ambient											
K*DD044L4S*	K*DP044L4S*	(2) 4DJNF76KE	256,800	230,800	203,600	178,400	158,800	138,200	120,200	102,200	87,600
K*DD054L4S*	K*DP054L4S*	(2) 6DHNF93KE	311,800	281,200	250,000	219,800	195,800	168,400	142,800	119,800	100,800
K*DD060L4S*	K*DP060L4S*	(2) 6DJNF11ME	348,200	316,000	281,600	249,000	222,600	192,200	163,200	139,200	114,000
K*DD080L4S*	K*DP080L4S*	(2) 6DUNF13ME	428,000	391,400	352,000	312,200	278,000	241,600	205,000	171,600	142,400
95°F Ambient											
K*DD044L4S*	K*DP044L4S*	(2) 4DJNF76KE	246,000	220,600	194,400	169,800	151,000	131,200	114,200	95,200	77,400
K*DD054L4S*	K*DP054L4S*	(2) 6DHNF93KE	299,400	269,400	239,200	209,600	186,000	159,200	134,200	112,800	96,200
K*DD060L4S*	K*DP060L4S*	(2) 6DJNF11ME	333,200	302,000	268,600	236,600	210,400	180,600	152,800	129,200	112,400
K*DD080L4S*	K*DP080L4S*	(2) 6DUNF13ME	411,600	375,600	335,600	296,600	260,600	223,600	191,000	158,600	128,400
100°F Ambient											
K*DD044L4S*	K*DP044L4S*	(2) 4DJNF76KE	234,800	210,200	185,000	161,200	142,800	123,800	108,000	88,200	70,800
K*DD054L4S*	K*DP054L4S*	(2) 6DHNF93KE	287,400	257,600	228,000	199,000	175,600	149,800	124,600	104,600	87,600
K*DD060L4S*	K*DP060L4S*	(2) 6DJNF11ME	317,800	284,600	254,800	224,000	198,400	168,800	141,400	117,600	102,000
K*DD080L4S*	K*DP080L4S*	(2) 6DUNF13ME	399,200	363,000	321,600	283,800	247,200	210,800	176,200	139,800	113,400
110°F Ambient											
K*DD044L4S*	K*DP044L4S*	(2) 4DJNF76KE	212,800	189,200	165,600	144,600	126,200	108,800	93,600	74,000	57,600
K*DD054L4S*	K*DP054L4S*	(2) 6DHNF93KE	260,200	230,600	203,800	176,600	153,800	128,800	103,800	86,400	69,600
K*DD060L4S*	K*DP060L4S*	(2) 6DJNF11ME	285,600	254,400	226,200	196,800	172,200	143,800	120,000	97,000	80,400
K*DD080L4S*	K*DP080L4S*	(2) 6DUNF13ME	364,200	330,600	292,600	256,200	222,800	183,600	150,000	117,000	90,000

* Each asterisk represents a variable character based upon model and voltage ordered. See page 2 for nomenclature.
All capacities are calculated at 65°F return gas temperature and dew point values.
Head fan required on R404A below -25°F.
Demand cooling required on R407A, R407C, R407F, R448A and R449A/B.
‡ Multiply capacity by .83 when used with 50 Hz power.

Capacity Data (BTUH) - Low Temp. R407C Discus - Dual / Parallel Compressors - 60 Hz‡

SUCTION TEMPERATURE

DUAL MODEL	PARALLEL MODEL	COMP. MODEL	0	-5	-10	-15	-20	-25	-30	-35	-40
90°F Ambient											
K*DD044L4S*	K*DP044L4S*	(2) 4DJNF76KE	219,200	201,800	183,000	165,600	148,800	131,800	115,000	100,000	84,000
K*DD054L4S*	K*DP054L4S*	(2) 6DHNF93KE	289,400	264,800	238,200	214,000	190,800	167,200	145,000	125,800	107,600
K*DD060L4S*	K*DP060L4S*	(2) 6DJNF11ME	330,600	302,600	272,400	244,200	217,400	192,200	168,400	145,400	125,400
K*DD080L4S*	K*DP080L4S*	(2) 6DUNF13ME	417,400	379,800	342,200	310,400	280,800	250,200	220,400	191,600	160,600
95°F Ambient											
K*DD044L4S*	K*DP044L4S*	(2) 4DJNF76KE	211,000	191,400	175,000	158,000	141,800	124,600	108,400	94,200	80,000
K*DD054L4S*	K*DP054L4S*	(2) 6DHNF93KE	274,000	251,200	225,800	201,400	180,400	157,200	135,400	116,800	99,400
K*DD060L4S*	K*DP060L4S*	(2) 6DJNF11ME	315,600	288,000	258,800	230,800	207,400	181,600	157,200	135,800	116,800
K*DD080L4S*	K*DP080L4S*	(2) 6DUNF13ME	384,600	349,000	313,600	283,600	255,800	227,200	202,000	173,400	143,000
100°F Ambient											
K*DD044L4S*	K*DP044L4S*	(2) 4DJNF76KE	207,600	190,400	172,000	154,200	138,400	121,600	105,000	90,000	73,400
K*DD054L4S*	K*DP054L4S*	(2) 6DHNF93KE	269,400	246,600	221,400	198,000	175,800	152,800	130,800	111,200	93,000
K*DD060L4S*	K*DP060L4S*	(2) 6DJNF11ME	309,000	281,600	253,000	226,400	202,000	177,000	152,600	131,600	111,400
K*DD080L4S*	K*DP080L4S*	(2) 6DUNF13ME	384,400	346,800	312,000	280,200	252,200	223,200	191,800	163,800	131,400
110°F Ambient											
K*DD044L4S*	K*DP044L4S*	(2) 4DJNF76KE	189,800	173,200	155,600	139,400	123,600	108,000	91,600	77,000	61,600
K*DD054L4S*	K*DP054L4S*	(2) 6DHNF93KE	243,600	221,800	198,200	176,000	154,400	132,600	112,000	93,600	75,800
K*DD060L4S*	K*DP060L4S*	(2) 6DJNF11ME	280,200	254,600	228,200	203,000	178,600	157,000	134,200	115,000	93,600
K*DD080L4S*	K*DP080L4S*	(2) 6DUNF13ME	362,600	323,400	290,000	257,600	230,000	201,800	167,600	139,400	104,400

Capacity Data (BTUH) - Low Temp. R448A, R449A/B Discus - Dual / Parallel Compressors - 60 Hz‡

SUCTION TEMPERATURE

DUAL MODEL	PARALLEL MODEL	COMP. MODEL	0	-5	-10	-15	-20	-25	-30	-35	-40
90°F Ambient											
K*DD044L4S*	K*DP044L4S*	(2) 4DJNF76KE	261,600	235,600	209,400	186,400	165,200	143,600	123,400	104,400	84,200
K*DD054L4S*	K*DP054L4S*	(2) 6DHNF93KE	307,400	278,000	247,600	220,000	1946,00	168,600	144,200	121,000	99,600
K*DD060L4S*	K*DP060L4S*	(2) 6DJNF11ME	358,000	325,000	290,200	257,800	229,200	199,000	170,000	142,200	113,200
K*DD080L4S*	K*DP080L4S*	(2) 6DUNF13ME	438,800	401,400	359,000	318,400	281,400	244,400	210,000	172,800	141,600
95°F Ambient											
K*DD044L4S*	K*DP044L4S*	(2) 4DJNF76KE	251,000	225,800	200,400	176,600	156,600	135,400	115,400	96,800	75,600
K*DD054L4S*	K*DP054L4S*	(2) 6DHNF93KE	294,600	266,000	236,400	209,600	184,600	159,000	135,000	111,600	89,600
K*DD060L4S*	K*DP060L4S*	(2) 6DJNF11ME	343,400	310,800	276,600	244,800	217,000	187,600	159,200	130,400	100,000
K*DD080L4S*	K*DP080L4S*	(2) 6DUNF13ME	424,000	387,200	345,800	307,000	269,200	231,600	197,800	158,600	129,600
100°F Ambient											
K*DD044L4S*	K*DP044L4S*	(2) 4DJNF76KE	240,800	215,600	190,600	167,600	147,800	128,800	107,200	87,600	69,400
K*DD054L4S*	K*DP054L4S*	(2) 6DHNF93KE	281,400	253,400	224,800	198,600	174,000	148,800	125,200	101,600	77,200
K*DD060L4S*	K*DP060L4S*	(2) 6DJNF11ME	326,800	292,000	262,400	231,400	203,800	174,600	146,600	119,600	91,400
K*DD080L4S*	K*DP080L4S*	(2) 6DUNF13ME	408,200	368,400	332,000	292,000	255,400	218,800	183,800	139,800	109,200
110°F Ambient											
K*DD044L4S*	K*DP044L4S*	(2) 4DJNF76KE	219,000	195,400	171,600	150,200	130,200	109,600	902,00	73,400	51,600
K*DD054L4S*	K*DP054L4S*	(2) 6DHNF93KE	253,800	227,600	200,200	175,200	151,400	127,000	102,000	81,000	61,200
K*DD060L4S*	K*DP060L4S*	(2) 6DJNF11ME	294,600	265,000	233,400	204,400	177,000	148,400	119,200	94,000	73,200
K*DD080L4S*	K*DP080L4S*	(2) 6DUNF13ME	377,000	341,800	302,000	263,800	226,600	189,600	154,600	117,600	84,000

* Each asterisk represents a variable character based upon model and voltage ordered. See page 2 for nomenclature.
All capacities are calculated at 65°F return gas temperature and dew point values.
Demand cooling required on R407A, R407C, R407F, R448A and R449A/B.
‡ Multiply capacity by .83 when used with 50 Hz power.

Electrical Specifications - Discus - Single Compressor Models

BASE MODEL	COMPRESSOR MODEL	COMPRESSOR			COND. FAN		CONTROL AMPS	AIR DEFROST/REMOTE	
		RLA	MCC	LRA^	TOTAL FAN FLA	QTY.		MCA	MOPD
208-230V/3/60 Hz									
K*DV015M4S*	3DS3R17ME	53.5	83.5	275.0	13.0	2	2.0	81.9	125
K*DV020M4S*	4DBNR20ME	64.7	101.0	374.0	13.0	2	2.0	95.9	150
K*DV025M4S*	4DHNR22ME	66.8	104.2	428.0	13.0	2	2.0	98.5	150
K*DV030M4S*	4DJNR28ME	94.6	147.6	292.0^	13.0	2	2.0	133.3	225
K*DV035M4S*	6DHNR35ME	112.3	175.2	340.0^	19.5	3	2.0	161.9	250
K*DV040M4S*	6DJNR40ME	128.2	200.0	340.0^	19.5	3	2.0	181.8	300
K*DV050M4S*	6DUNR49ME	–	–	–	–	–	–	–	–
K*DV022L4S*	4DJNF76KE	57.7	90.0	374.0	13.0	2	2.0	87.1	125
K*DV027L4S*	6DHNF93KE	72.4	113.0	450.0	13.0	2	2.0	105.5	175
K*DV030L4S*	6DJNF11ME	85.8	133.8	292.0^	13.0	2	2.0	122.3	200
K*DV040L4S*	6DUNF13ME	–	–	–	–	–	–	–	–
460V/3/60 Hz									
K*DV015M4S*	3DS3R17ME	26.0	40.6	138.0	6.6	2	1.0	40.1	60
K*DV020M4S*	4DBNR20ME	32.4	50.5	187.0	6.6	2	1.0	48.1	80
K*DV025M4S*	4DHNR22ME	35.9	56.0	206.0	6.6	2	1.0	52.5	80
K*DV030M4S*	4DJNR28ME	43.3	67.6	235.0	6.6	2	1.0	61.7	100
K*DV035M4S*	6DHNR35ME	56.2	87.6	283.0	9.9	3	1.0	81.2	125
K*DV040M4S*	6DJNR40ME	64.1	100.0	297.0	9.9	3	1.0	91.0	150
K*DV050M4S*	6DUNR49ME	75.0	117.0	482.0	9.9	3	1.0	104.7	175
K*DV022L4S*	4DJNF76KE	30.4	47.4	180.0	6.6	2	1.0	45.6	70
K*DV027L4S*	6DHNF93KE	36.2	56.5	225.0	6.6	2	1.0	52.9	80
K*DV030L4S*	6DJNF11ME	42.9	66.9	235.0	6.6	2	1.0	61.2	100
K*DV040L4S*	6DUNF13ME	60.9	95.0	367.0	6.6	2	1.0	83.7	125

* Each asterisk represents a variable character based upon model and voltage ordered. See page 2 for nomenclature.
^ Model utilizes part winding start.

Electrical Specifications - Discus - Single Compressor Models Cont.

BASE MODEL	4 CONTACTOR DEFROST KIT					2 CONTACTOR DEFROST KIT					1 CONTACTOR DEFROST KIT				
	KIT NAME	FAN AMPS	HEATER AMPS	MCA	MOPD	KIT NAME	FAN AMPS	HEATER AMPS	MCA	MOPD	KIT NAME	FAN AMPS	HEATER AMPS	MCA	MOPD
208-230V/3/60 Hz															
K*DV015M4S*	DLD96	24.0	96.0	122.0	150	DLB96	24.0	96.0	122.0	150	DLA48	15.0	48.0	96.9	150
K*DV020M4S*	DLD96	24.0	96.0	122.0	175	DLB96	24.0	96.0	122.0	175	DLA48	15.0	48.0	110.9	175
K*DV025M4S*	DLD192	24.0	192.0	242.0	250	DLB96	24.0	96.0	122.5	175	DLA48	15.0	48.0	113.5	175
K*DV030M4S*	DLD192	24.0	192.0	242.0	250	DLB96	24.0	96.0	157.3	250	DLA48	15.0	48.0	148.3	225
K*DV035M4S*	DLD192	24.0	192.0	242.0	250	DLB96	24.0	96.0	185.9	250	DLA48	15.0	48.0	176.9	250
K*DV040M4S*	DLD192	24.0	192.0	242.0	300	DLB96	24.0	96.0	205.8	300	DLA48	15.0	48.0	196.8	300
K*DV050M4S*	–	–	–	–	–	–	–	–	–		–	–	–	–	–
K*DV022L4S*	DLD96	24.0	96.0	122.0	150	DLB96	24.0	96.0	122.0	150	DLA48	15.0	48.0	102.1	150
K*DV027L4S*	DLD96	24.0	96.0	129.5	200	DLB96	24.0	96.0	129.5	200	DLA48	15.0	48.0	120.5	175
K*DV030L4S*	DLD144	24.0	144.0	182.0	225	DLB96	24.0	96.0	146.3	225	DLA48	15.0	48.0	137.3	200
K*DV040L4S*	–	–	–	–	–	–	–	–	–		–	–	–	–	–
460V/3/60 Hz															
K*DV015M4S*	DLD60	24.0	60.0	76.0	90	DLB48	15.0	48.0	61.0	80	DLA24	15.0	24.0	55.1	80
K*DV020M4S*	DLD60	24.0	60.0	76.0	100	DLB48	15.0	48.0	63.1	90	DLA48	15.0	48.0	63.1	90
K*DV025M4S*	DLD96	24.0	96.0	121.0	125	DLB48	15.0	48.0	67.5	100	DLA48	15.0	48.0	67.5	100
K*DV030M4S*	DLD96	24.0	96.0	121.0	125	DLB48	15.0	48.0	76.7	110	DLA48	15.0	48.0	76.7	110
K*DV035M4S*	DLD96	24.0	96.0	121.0	150	DLB48	15.0	48.0	96.2	150	DLA48	15.0	48.0	96.2	150
K*DV040M4S*	DLD96	24.0	96.0	121.0	175	DLB48	15.0	48.0	106.0	150	DLA48	15.0	48.0	106.0	150
K*DV050M4S*	DLD96	24.0	96.0	128.7	200	DLB48	15.0	48.0	119.7	175	DLA48	15.0	48.0	119.7	175
K*DV022L4S*	DLD60	24.0	60.0	76.0	90	DLB48	15.0	48.0	61.0	90	DLA48	15.0	48.0	61.0	90
K*DV027L4S*	DLD60	24.0	60.0	76.9	110	DLB48	15.0	48.0	67.9	100	DLA48	15.0	48.0	67.9	100
K*DV030L4S*	DLD96	24.0	96.0	121.0	125	DLB48	15.0	48.0	76.2	110	DLA48	15.0	48.0	76.2	110
K*DV040L4S*	DLD96	24.0	96.0	121.0	150	DLB48	15.0	48.0	98.7	150	DLA48	15.0	48.0	98.7	150

* Each asterisk represents a variable character based upon model and voltage ordered. See page 2 for nomenclature.

Application: Food Processing and Warehousing

Electrical Specifications - Discus - Dual Compressor Models

BASE MODEL	COMPRESSOR MODEL	COMPRESSOR			COND. FAN		CONTROL AMPS	AIR DEFROST/REMOTE	
		RLA	MCC	LRA^	TOTAL FAN FLA	QTY.		MCA	MOPD
208-230V/3/60 Hz									
K*DD030M4S*	(2) 3DS3R17ME	53.5	83.5	275.0	26.0	4	2	148.4	200
K*DD040M4S*	(2) 4DBNR20ME	64.7	101.0	374.0	26.0	4	2	173.6	225
K*DD050M4S*	(2) 4DHNR22ME	66.8	104.2	428.0	26.0	4	2	178.3	225
K*DD060M4S*	(2) 4DJNR28ME	94.6	147.6	292.0^	26.0	4	2	240.9	300
K*DD070M4S*	(2) 6DHNR35ME	112.3	175.2	340.0^	39.0	6	2	293.7	400
K*DD080M4S*	(2) 6DJNR40ME	128.2	200.0	340.0^	39.0	6	2	329.5	450
K*DD100M4S*	(2) 6DUNR49ME	–	–	–	–	–	–	–	–
K*DD044L4S*	(2) 4DJNF76KE	57.7	90.0	374.0	26.0	4	2	157.8	200
K*DD054L4S*	(2) 6DHNF93KE	72.4	113.0	450.0	26.0	4	2	190.9	250
K*DD060L4S*	(2) 6DJNF11ME	85.8	133.8	292.0^	26.0	4	2	221.1	300
K*DD080L4S*	(2) 6DUNF13ME	–	–	–	–	–	–	–	–
460V/3/60 Hz									
K*DD030M4S*	(2) 3DS3R17ME	26.0	40.6	138.0	13.2	4	1	72.7	90
K*DD040M4S*	(2) 4DBNR20ME	32.4	50.5	187.0	13.2	4	1	87.1	110
K*DD050M4S*	(2) 4DHNR22ME	35.9	56.0	206.0	13.2	4	1	95.0	125
K*DD060M4S*	(2) 4DJNR28ME	43.3	67.6	235.0	13.2	4	1	111.6	150
K*DD070M4S*	(2) 6DHNR35ME	56.2	87.6	283.0	19.8	6	1	147.3	200
K*DD080M4S*	(2) 6DJNR40ME	64.1	100.0	297.0	19.8	6	1	165.0	225
K*DD100M4S*	(2) 6DUNR49ME	75.0	117.0	482.0	19.8	6	1	189.6	250
K*DD044L4S*	(2) 4DJNF76KE	30.4	47.4	180.0	13.2	4	1	82.6	110
K*DD054L4S*	(2) 6DHNF93KE	36.2	56.5	225.0	13.2	4	1	95.7	125
K*DD060L4S*	(2) 6DJNF11ME	42.9	66.9	235.0	13.2	4	1	110.7	150
K*DD080L4S*	(2) 6DUNF13ME	60.9	95.0	367.0	13.2	4	1	151.2	200

* Each asterisk represents a variable character based upon model and voltage ordered. See page 2 for nomenclature.
^ Model utilizes part winding start.

Electrical Specifications - Discus - Dual Compressor Models Cont.

BASE MODEL	2 CONTACTOR DEFROST KIT							1 CONTACTOR DEFROST KIT						
	KIT NAME	KIT FAN AMPS	KIT HEAT AMPS	FAN AMPS	TOTAL HEATER AMPS	MCA	MOPD	KIT NAME	KIT FAN AMPS	KIT HEAT AMPS	FAN AMPS	TOTAL HEATER AMPS	MCA	MOPD
208-230V/3/60 Hz														
K*DD030M4S*	DLB48	15.0	48.0	30.0	96.0	178.4	225	DLA48	15.0	48.0	30.0	96.0	178.4	225
K*DD040M4S*	DLB48	15.0	48.0	30.0	96.0	203.6	250	DLA48	15.0	48.0	30.0	96.0	203.6	250
K*DD050M4S*	DLB96	24.0	96.0	48.0	192.0	242.5	250	DLA48	15.0	48.0	30.0	96.0	208.3	250
K*DD060M4S*	DLB96	24.0	96.0	48.0	192.0	288.9	350	DLA48	15.0	48.0	30.0	96.0	270.9	350
K*DD070M4S*	DLB96	24.0	96.0	48.0	192.0	341.7	450	DLA48	15.0	48.0	30.0	96.0	323.7	400
K*DD080M4S*	DLB96	24.0	96.0	48.0	192.0	377.5	500	DLA48	15.0	48.0	30.0	96.0	359.5	450
K*DD100M4S*	–	–	–	–	–	–	–	–	–	–	–	–	–	–
K*DD044L4S*	DLB60	15.0	60.0	30.0	120.0	187.8	225	DLA48	15.0	48.0	30.0	96.0	187.8	225
K*DD054L4S*	DLB60	15.0	60.0	30.0	120.0	220.9	250	DLA48	15.0	48.0	30.0	96.0	220.9	250
K*DD060L4S*	DLB60	15.0	60.0	30.0	120.0	251.1	300	DLA48	15	48.0	30.0	96.0	251.1	300
K*DD080L4S*	–	–	–	–	–	–	–	–	–	–	–	–	–	–
460V/3/60 Hz														
K*DD030M4S*	DLB48	15.0	48.0	30.0	96.0	121.0	125	DLA35	15	35	30	70	102.7	125
K*DD040M4S*	DLB48	15.0	48.0	30.0	96.0	123.1	125	DLA35	15	35	30	70	117.1	125
K*DD050M4S*	DLB48	15.0	48.0	30.0	96.0	127.5	150	DLA35	15	35	30	70	125.0	150
K*DD060M4S*	DLB48	15.0	48.0	30.0	96.0	141.6	175	DLA35	15	35	30	70	141.6	175
K*DD070M4S*	DLB48	15.0	48.0	30.0	96.0	177.3	225	DLA35	15	35	30	70	177.3	225
K*DD080M4S*	DLB48	15.0	48.0	30.0	96.0	195.0	250	DLA35	15	35	30	70	195.0	250
K*DD100M4S*	DLB48	15.0	48.0	30.0	96.0	219.6	250	DLA35	15	35	30	70	219.6	250
K*DD044L4S*	DLB48	15.0	48.0	30.0	96.0	121.0	125	DLA35	15	35	30	70	112.6	125
K*DD054L4S*	DLB48	15.0	48.0	30.0	96.0	127.9	150	DLA35	15	35	30	70	125.7	150
K*DD060L4S*	DLB48	15.0	48.0	30.0	96.0	140.7	175	DLA35	15	35	30	70	140.7	175
K*DD080L4S*	DLB48	15.0	48.0	30.0	96.0	181.2	225	DLA35	15	35	30	70	181.2	225

* Each asterisk represents a variable character based upon model and voltage ordered. See page 2 for nomenclature.

Application: Commercial Warehouse Cooling

Electrical Specifications - Discus - Parallel Compressor Models

BASE MODEL	COMPRESSOR MODEL	COMPRESSOR			COND. FAN		CONTROL AMPS	AIR DEFROST/REMOTE	
		RLA	MCC	LRA^	TOTAL FAN FLA	QTY.		MCA	MOPD
208-230V/3/60 Hz									
K*DP050M4S*	(2) 4DHNR22ME	66.8	104.2	428.0	26.0	4	2.0	178.3	225
K*DP060M4S*	(2) 4DJNR28ME	94.6	147.6	292.0^	26.0	4	2.0	240.9	300
K*DP070M4S*	(2) 6DHNR35ME	112.3	175.2	340.0^	39.0	6	2.0	293.7	400
K*DP080M4S*	(2) 6DJNR40ME	128.2	200.0	340.0^	39.0	6	2.0	329.5	450
K*DP100M4S*	(2) 6DUNR49ME	–	–	–	–	–	–	–	–
K*DP044L4S*	(2) 4DJNF76KE	57.7	90.0	374.0	26.0	4	2.0	157.8	200
K*DP054L4S*	(2) 6DHNF93KE	72.4	113.0	450.0	26.0	4	2.0	190.9	250
K*DP060L4S*	(2) 6DJNF11ME	85.8	133.8	292.0^	26.0	4	2.0	221.1	300
K*DP080L4S*	(2) 6DUNF13ME	–	–	–	–	–	–	–	–
460V/3/60 Hz									
K*DP050M4S*	(2) 4DHNR22ME	35.9	56.0	206.0	13.2	4	1.0	95.0	125
K*DP060M4S*	(2) 4DJNR28ME	43.3	67.6	235.0	13.2	4	1.0	111.6	150
K*DP070M4S*	(2) 6DHNR35ME	56.2	87.6	283.0	19.8	6	1.0	147.3	200
K*DP080M4S*	(2) 6DJNR40ME	64.1	100.0	297.0	19.8	6	1.0	165.0	225
K*DP100M4S*	(2) 6DUNR49ME	75.0	117.0	482.0	19.8	6	1.0	189.6	250
K*DP044L4S*	(2) 4DJNF76KE	30.4	47.4	180.0	13.2	4	1.0	82.6	110
K*DP054L4S*	(2) 6DHNF93KE	36.2	56.5	225.0	13.2	4	1.0	95.7	125
K*DP060L4S*	(2) 6DJNF11ME	42.9	66.9	235.0	13.2	4	1.0	110.7	150
K*DP080L4S*	(2) 6DUNF13ME	60.9	95.0	367.0	13.2	4	1.0	151.2	200

* Each asterisk represents a variable character based upon model and voltage ordered. See page 2 for nomenclature.

^ Model utilizes part winding start.

Electrical Specifications - Discus - Parallel Compressor Models Cont.

BASE MODEL	4 CONTACTOR DEFROST KIT					2 CONTACTOR DEFROST KIT				
	KIT NAME	FAN AMPS	HEATER AMPS	MCA	MOPD	KIT NAME	FAN AMPS	HEATER AMPS	MCA	MOPD
208-230V/3/60 Hz										
K*DP050M4S*	DLD192	24.0	192.0	242.0	250	DLB96	24.0	96.0	202.3	250
K*DP060M4S*	DLD192	24.0	192.0	264.9	350	DLB96	24.0	96.0	264.9	350
K*DP070M4S*	DLD192	24.0	192.0	317.7	400	DLB96	24.0	96.0	317.7	400
K*DP080M4S*	DLD192	24.0	192.0	353.5	450	DLB96	24.0	96.0	353.5	450
K*DP100M4S*	–	–	–	–	–	–	–	–	–	–
K*DP044L4S*	DLD96	24.0	96.0	181.8	225	DLB60	15.0	60.0	172.8	225
K*DP054L4S*	DLD96	24.0	96.0	214.9	250	DLB96	24.0	96.0	214.9	250
K*DP060L4S*	DLD144	24.0	144.0	245.1	300	DLB96	24.0	96.0	245.1	300
K*DP080L4S*	–	–	–	–	–	–	–	–	–	–
460V/3/60 Hz										
K*DP050M4S*	DLD96	24.0	96.0	121.0	150	DLB48	15.0	48.0	110.0	125
K*DP060M4S*	DLD96	24.0	96.0	135.6	175	DLB48	15.0	48.0	126.6	150
K*DP070M4S*	DLD96	24.0	96.0	171.3	225	DLB48	15.0	48.0	162.3	200
K*DP080M4S*	DLD96	24.0	96.0	189.0	250	DLB48	15.0	48.0	180.0	225
K*DP100M4S*	DLD96	24.0	96.0	213.6	250	DLB48	15.0	48.0	204.6	250
K*DP044L4S*	DLD60	24.0	60.0	106.6	125	DLB48	15.0	48.0	97.6	125
K*DP054L4S*	DLD60	24.0	60.0	119.7	150	DLB48	15.0	48.0	110.7	125
K*DP060L4S*	DLD60	24.0	60.0	134.7	175	DLB48	15.0	48.0	125.7	150
K*DP080L4S*	DLD60	24.0	60.0	175.2	225	DLB48	15.0	48.0	166.2	225

* Each asterisk represents a variable character based upon model and voltage ordered. See page 2 for nomenclature.

Application: Industrial Cooling

Defrost Kits - All Models

DEFROST KIT NOMENCLATURE

When selecting defrost kit, use the next higher amp value above the defrost load.

DL	HEATER CONTACTOR QTY.	MAX TOTAL HEATER AMP VALUE	SPECIAL KIT CODES
Defrost Kit Large Condenser	**A:** 1 Heater Contactor **B:** 2 Heater Contactors **C:** 3 Heater Contactors **D:** 4 Heater Contactors	30 = 30 amps total 48 = 48 amps total	PP = Pressure Prop Kits for Large Evaporators Kits beginning with "**K**" are for use with large Kramer evaporators. Models include internal heater branch fusing. "-1" # of Evaporators with Multiple Heater Feeds

All kits include 1 fan contactor and are suitable for 1 or 3 phase loads.
Electrical resistance loads greater than 48 amps must be split into multiple circuits.

Single and Parallel Compressor Kit Options

1 Contactor	2 Contactor	3 Contactor	4 Contactor	Special Kramer
NONE TMR ONLY	DLB35 DLB40	DLC35 DLC40	DLD60 DLD96	KDLA53 KDLA76
DLA24 DLA30	DLB48 DLB60	DLC48 DLC60	DLD144 DLD144-2	KDLA100 KDLA53PP
DLA35 DLA40 DLA48	DLB60-1 DLB96 DLB96-1	DLC96 DLC144 DLC60PP	DLD192-2 DLD144-2 DLD192-2	KDLA76PP KDLA100PP KDLB106
DLA24PP DLA30PP DLA35PP	DLB35PP DLB40PP DLB48PP	DLC96PP DLC144PP	DLD144-2PP DLD192-2PP	KDLB152 KDLB200 KDLB106PP
DLA40PP DLA48PP	DLB60PP DLB60-1PP			KDLB152PP KDLB200PP
	DLB96PP DLB96-1PP			

Defrost Kit selected for Single and Parallel compressor models is for entire unit. Up to 4 contactors.

Dual Compressor Kit Options

1 Contactor	2 Contactor	Special Kramer
NONE TMR ONLY	DLB35 DLB40	KDLA53 KDLA76
DLA24 DLA30 DLA35	DLB48 DLB60 DLB60-1	KDLA100 KDLA53PP KDLA76PP
DLA40 DLA48	DLB96 DLB96-1	KDLA100PP KDLB106
DLA24PP DLA30PP DLA35PP	DLB35PP DLB40PP DLB48PP	KDLB152 KDLB200 KDLB106PP
DLA40PP DLA48PP	DLB60PP DLB60-1PP	KDLB152PP KDLB200PP
	DLB96PP DLB96-1PP	

Defrost Kit selected is per compressor for Dual compressor models. Up to 2 contactors/compressor.

Specifications - All Models

MODEL DATA				CONNECTIONS (ODS)		RECEIVER CAPACITY BY REFRIGERANT					
						STANDARD RECEIVER					
MODEL NUMBER	COMP. MODEL	HP	COND. FAN QTY.	LIQUID	SUCTION ^	90% R404A (LBS.)		90% R407A, R407C, R407F (LBS.)		90% R448A, R449A, R449B (LBS.)	
						KF FLOOD.	KB NON-FLOOD.	KF FLOOD.	KB NON-FLOOD.	KF FLOOD.	KB NON-FLOOD.
Single Compressor Models											
K*DV015M4S*	3DS3R17ME	15	2	7/8	1-5/8	99	99	109	109	103	103
K*DV020M4S*	4DBNR20ME	20	2	7/8	2-1/8	133	99	146	109	139	103
K*DV025M4S*	4DHNR22ME	25	2	7/8	2-1/8	133	99	146	109	139	103
K*DV030M4S*	4DJNR28ME	30	2	1-1/8	2-1/8	200	133	219	146	209	139
K*DV035M4S*	6DHNR35ME	35	3	1-1/8	2-1/8	200	133	219	146	209	139
K*DV040M4S*	6DJNR40ME	40	3	1-1/8	2-1/8	200	133	219	146	209	139
K*DV050M4S*	6DUNR49ME	50	3	1-1/8	2-5/8	261	200	286	219	272	209
K*DV022L4S*	4DJNF76KE	22	2	7/8	2-1/8	99	99	109	109	103	103
K*DV027L4S*	6DHNF93KE	27	2	7/8	2-1/8	133	99	146	109	139	103
K*DV030L4S*	6DJNF11ME	30	2	7/8	2-1/8	133	99	146	109	139	103
K*DV040L4S*	6DUNF13ME	40	2	1-1/8	2-5/8	200	133	219	146	209	139
Dual Compressor Models											
K*DD030M4S*	(2) 3DS3R17ME	30	4	(2) 7/8	(2) 1-5/8	(2) 99	(2) 99	(2) 109	(2) 109	(2) 103	(2) 103
K*DD040M4S*	(2) 4DBNR20ME	40	4	(2) 7/8	(2) 2-1/8	(2) 133	(2) 99	(2) 146	(2) 109	(2) 139	(2) 103
K*DD050M4S*	(2) 4DHNR22ME	50	4	(2) 7/8	(2) 2-1/8	(2) 133	(2) 99	(2) 146	(2) 109	(2) 139	(2) 103
K*DD060M4S*	(2) 4DJNR28ME	60	4	(2) 1-1/8	(2) 2-1/8	(2) 200	(2) 133	(2) 219	(2) 146	(2) 209	(2) 139
K*DD070M4S*	(2) 6DHNR35ME	70	6	(2) 1-1/8	(2) 2-1/8	(2) 200	(2) 133	(2) 219	(2) 146	(2) 209	(2) 139
K*DD080M4S*	(2) 6DJNR40ME	80	6	(2) 1-1/8	(2) 2-1/8	(2) 200	(2) 133	(2) 219	(2) 146	(2) 209	(2) 139
K*DD100M4S*	(2) 6DUNR49ME	100	6	(2) 1-1/8	(2) 2-5/8	(2) 261	(2) 200	(2) 286	(2) 219	(2) 272	(2) 209
K*DD044L4S*	(2) 4DJNF76KE	44	4	(2) 7/8	(2) 2-1/8	(2) 99	(2) 99	(2) 109	(2) 109	(2) 103	(2) 103
K*DD054L4S*	(2) 6DHNF93KE	54	4	(2) 7/8	(2) 2-1/8	(2) 133	(2) 99	(2) 146	(2) 109	(2) 139	(2) 103
K*DD060L4S*	(2) 6DJNF11ME	60	4	(2) 7/8	(2) 2-1/8	(2) 133	(2) 99	(2) 146	(2) 109	(2) 139	(2) 103
K*DD080L4S*	(2) 6DUNF13ME	80	4	(2) 1-1/8	(2) 2-5/8	(2) 200	(2) 133	(2) 219	(2) 146	(2) 209	(2) 139
Parallel Compressor Models											
K*DP050M4S*	(2) 4DHNR22ME	50	4	1-1/8	2 5/8	261	200	219	219	272	209
K*DP060M4S*	(2) 4DJNR28ME	60	4	1-3/8	2 5/8	261	200	219	219	272	209
K*DP070M4S*	(2) 6DHNR35ME	70	6	1-3/8	3 1/8	373	261	286	286	389	272
K*DP080M4S*	(2) 6DJNR40ME	80	6	1-5/8	3 1/8	373	261	286	286	389	272
K*DP100M4S*	(2) 6DUNR49ME	100	6	1-5/8	3 1/8	373	261	286	286	389	272
K*DP044L4S*	(2) 4DJNF76KE	44	4	1-1/8	3 1/8	200	133	146	146	209	139
K*DP054L4S*	(2) 6DHNF93KE	54	4	1-1/8	3 1/8	261	200	219	219	272	209
K*DP060L4S*	(2) 6DJNF11ME	60	4	1-1/8	3 1/8	261	200	219	219	272	209
K*DP080L4S*	(2) 6DUNF13ME	80	4	1-1/8	3 1/8	373	261	286	286	389	272

* Each asterisk represents a variable character based upon model and voltage ordered. See page 2 for nomenclature.

^ Connection size with or without factory installed liquid and/or suction line assembly.

NOMINAL COMPRESSOR HP		
SINGLE COMPRESSOR	DUAL PIPING	PARALLEL PIPING
15 HP	30 (2) 15 HP	-
20 HP	40 (2) 20 HP	-
22 HP	44 (2) 22 HP	44 (2) 22 HP
25 HP	50 (2) 25 HP	50 (2) 25 HP
27 HP	54 (2) 27 HP	54 (2) 27 HP
30 HP	60 (2) 30 HP	60 (2) 30 HP
35 HP	70 (2) 35 HP	70 (2) 35 HP
40 HP	80 (2) 40 HP	80 (2) 40 HP
50 HP	100 (2) 50 HP	100 (2) 50 HP

Specifications - All Models Cont.

MODEL DATA		FANS LONG	DIMENSIONS (IN.)			APPROX. SHIP WT. (LBS.)	SOUND DATA dBA†
MODEL NUMBER	COMP. MODEL		H	W	L		
Single Compressor Models							
K*DV015M4S*	3DS3R17ME	2	58-1/8	45-3/8	159-1/4	1,875	71.9
K*DV020M4S*	4DBNR20ME	2	58-1/8	45-3/8	159-1/4	1,940	71.9
K*DV025M4S*	4DHNR22ME	2	58-1/8	45-3/8	159-1/4	1,940	71.9
K*DV030M4S*	4DJNR28ME	2	58-1/8	45-3/8	159-1/4	1,940	71.9
K*DV035M4S*	6DHNR35ME	3	58-1/8	45-3/8	207-1/4	2,440	74.9
K*DV040M4S*	6DJNR40ME	3	58-1/8	45-3/8	207-1/4	2,440	74.9
K*DV050M4S*	6DUNR49ME	3	58-1/8	45-3/8	207-1/4	2,540	74.9
K*DV022L4S*	4DJNF76KE	2	58-1/8	45-3/8	159-1/4	1,940	71.9
K*DV027L4S*	6DHNF93KE	2	58-1/8	45-3/8	159-1/4	2,040	71.9
K*DV030L4S*	6DJNF11ME	2	58-1/8	45-3/8	159-1/4	2,040	71.9
K*DV040L4S*	6DUNF13ME	2	58-1/8	45-3/8	159-1/4	2,040	71.9
Dual Compressor Models							
K*DD030M4S*	(2) 3DS3R17ME	2	58-1/8	90-7/8	159-1/4	3,660	78.4
K*DD040M4S*	(2) 4DBNR20ME	2	58-1/8	90-7/8	159-1/4	3,780	78.4
K*DD050M4S*	(2) 4DHNR22ME	2	58-1/8	90-7/8	159-1/4	3,780	78.4
K*DD060M4S*	(2) 4DJNR28ME	2	58-1/8	90-7/8	159-1/4	3,780	78.4
K*DD070M4S*	(2) 6DHNR35ME	3	58-1/8	90-7/8	207-1/4	4,760	80.2
K*DD080M4S*	(2) 6DJNR40ME	3	58-1/8	90-7/8	207-1/4	4,760	80.2
K*DD100M4S*	(2) 6DUNR49ME	3	58-1/8	90-7/8	207-1/4	4,950	80.2
K*DD044L4S*	(2) 4DJNF76KE	2	58-1/8	90-7/8	159-1/4	3,780	78.4
K*DD054L4S*	(2) 6DHNF93KE	2	58-1/8	90-7/8	159-1/4	3,980	78.4
K*DD060L4S*	(2) 6DJNF11ME	2	58-1/8	90-7/8	159-1/4	3,980	78.4
K*DD080L4S*	(2) 6DUNF13ME	2	58-1/8	90-7/8	159-1/4	3,980	78.4
Parallel Compressor Models							
K*DP050M4S*	(2) 4DHNR22ME	2	58-1/8	90-7/8	159-1/4	3,720	78.4
K*DP060M4S*	(2) 4DJNR28ME	2	58-1/8	90-7/8	159-1/4	3,720	78.4
K*DP070M4S*	(2) 6DHNR35ME	3	58-1/8	90-7/8	207-1/4	4,680	80.2
K*DP080M4S*	(2) 6DJNR40ME	3	58-1/8	90-7/8	207-1/4	4,680	80.2
K*DP100M4S*	(2) 6DUNR49ME	3	58-1/8	90-7/8	207-1/4	4,880	80.2
K*DP044L4S*	(2) 4DJNF76KE	2	58-1/8	90-7/8	159-1/4	3,720	78.4
K*DP054L4S*	(2) 6DHNF93KE	2	58-1/8	90-7/8	159-1/4	3,920	78.4
K*DP060L4S*	(2) 6DJNF11ME	2	58-1/8	90-7/8	159-1/4	3,920	78.4
K*DP080L4S*	(2) 6DUNF13ME	2	58-1/8	90-7/8	159-1/4	3,920	78.4

Department of Energy Annual Walk-In Energy Factor (AWEF) Ratings^	
Base Model Number	**AWEF**
Medium Temperature Models[1]	
K*DV015M4S*	7.6
K*DV020M4S*	7.6
K*DV025M4S*	7.6
K*DV030M4S*	7.6
K*DV035M4S*	7.6
K*DV040M4S*	7.6
K*DV050M4S*	7.6
Low Temperature Models[2]	
K*DV022L4S*	3.15
K*DV027L4S*	3.15
K*DV030L4S*	3.15

* Each asterisk represents a variable character based upon model and voltage ordered. See page 2 for nomenclature.

† Estimated dBA values at 10 feet from the unit. Correction factors: Deduct 6 dBA for 20 to 40 feet, 12 dBA @ 40 to 60 feet. Ratings at the outlet of the discharge air. The actual measurements may vary depending upon installation variables. Environmental factors may have a significant influence on this data.

See page 28 for dimensional drawings.

^ Larger HP Single QV-series and Parallel Compressor models are not intended for use in walk-in coolers and freezers less than 3,000 sq. feet thus are outside of the scope of this DOE regulation. Dual Compressor models serve more than one refrigerated load thus are outside (exempt) of the scope of this DOE regulation.

1. If the medium temperature model has a numerical value in the table above, the following statement applies: "This refrigeration system is designed and certified for use in walk-in cooler applications."

2. If the low temperature model has a numerical value in the table above, the following statement applies: "This refrigeration system is designed and certified for use in walk-in freezer applications."

Highlighted Features

Hinged fan panels for easy serviceability

Gas filled struts hold fan panels securely in upright position

Service convenience outlet

Thru-the-door disconnect switch available as an option

Floored and lighted compressor cabinet with removable compressor tray

Mechanically formed pre-bent tubing reduces potential leaks

Service gauge hooks

Hinged and removable access panels

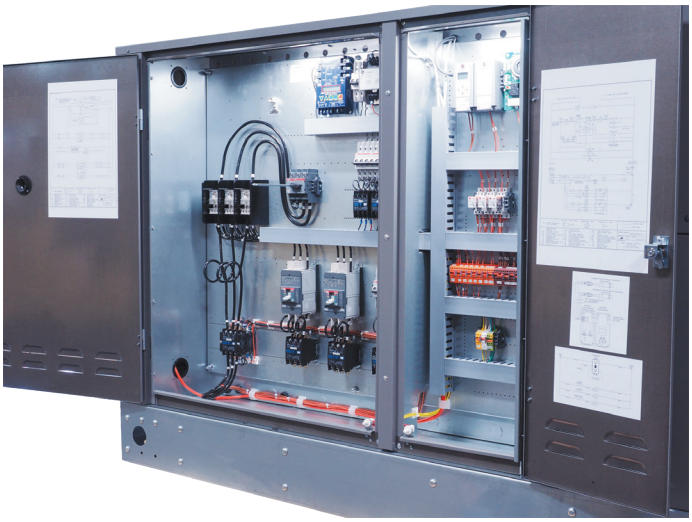

Hinged and removable lighted control panels

Easy to read control wiring diagram with diagnostic terminals

Separate high and low voltage control panels

Dimensional Drawings

SINGLE COMPRESSOR WIDTH

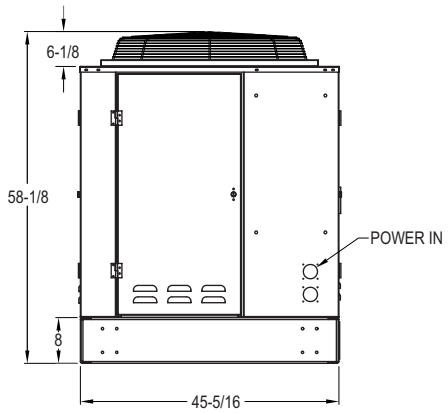

DUAL/PARALLEL COMPRESSOR WIDTH

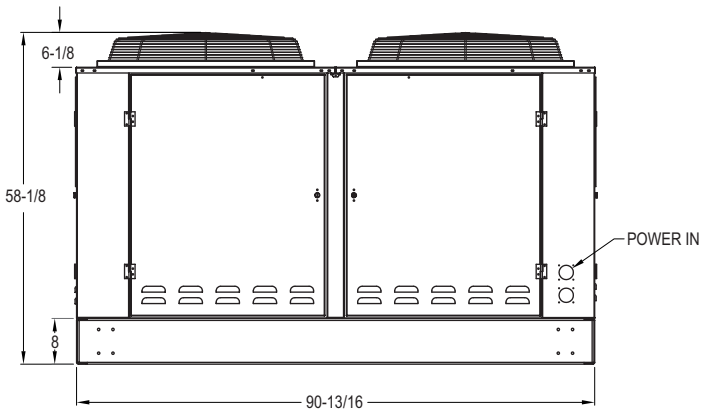

2 FAN

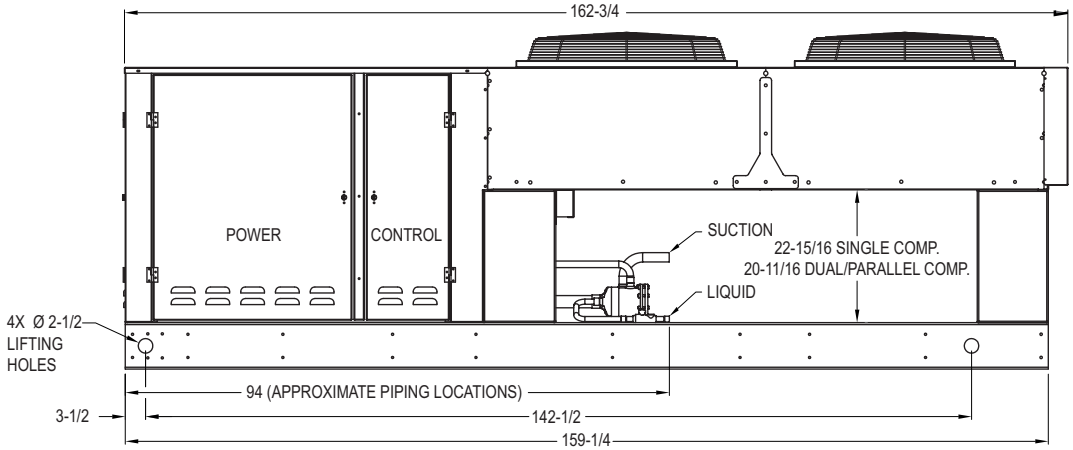

3 FAN

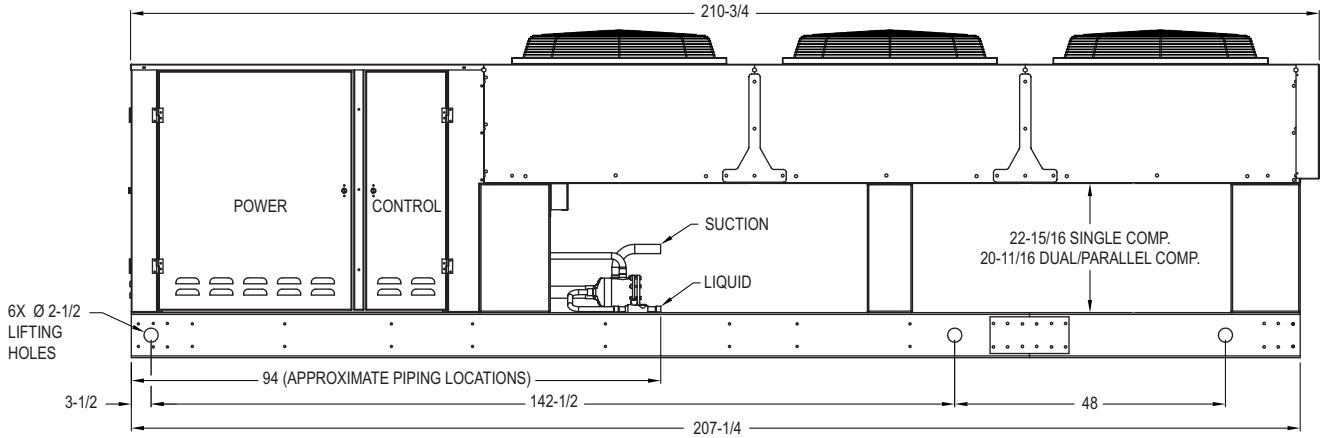

Notes:

- All dimensions are in inches.
- Utilize all lifting points during installation.
- Refrigerant connections located on each side for Dual models.

Due to continuing product development, specifications are subject to change without notice.