KRAMER

Catalog KM-QVB-0221A
Replaces KM-QVB-0720A

QV-SERIES

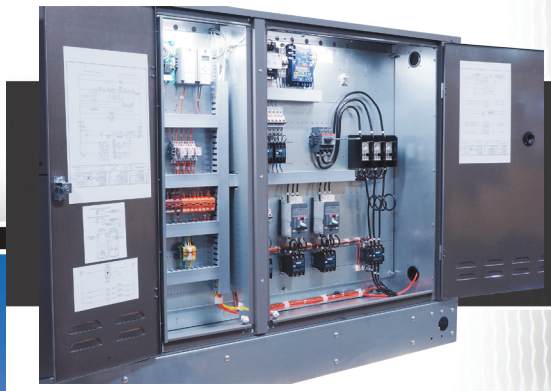

15 TO 100 HP AIR COOLED CONDENSING UNITS

with Bitzer Compressors

2018 DEALER DESIGN AWARDS
theNEWS | SILVER

c UL US

Efficient and Accessible

The design of the innovative QV-Series Condensing Units™ sets the new standard for efficiency, reliability and serviceability to meet the needs of the food processing, industrial cooling and warehousing industries. Models incorporate features from our award-winning Quantum Air™ Condensers such as the floating coil design with generously sized condensers for energy savings, swept wing fan blades for optimal air flow, and LED lighted control panel and hinged venturi panels for easy access. A floored compressor cabinet with removable compressor tray, service convenience outlet, hinged and removable access panels, integral liquid subcooling circuit, and paint protected galvanized steel housing are all standard features of these units.

Standard Features

- Bitzer Ecoline compressor^
- Available in single, dual or parallel compressor configurations from 15 to 100 HP
- Prepaint gray exterior/ G60 galvanized steel outdoor cabinet construction
- Heavy gauge G90 galvanized steel frame
- Award-winning floating coil design with generously sized condensers for energy savings
- Integral subcooling circuit boosts energy efficiency
- Mechanically formed pre-bent tubing reduces potential leaks
- Compatible with multiple refrigerants
- Optimized for high glide refrigerants
- Separate power and control electrical panels
- Swept wing fan/Venturi improves airflow and sound
- Hinged and removable access panels
- Flip top hinged Venturi panels for easy servicing
- Floored compressor cabinet with removable compressor tray
- LED control and compressor panel lighting
- 110V service convenience outlet
- Service gauge hooks
- 3 Phase condenser fan motors
- Color-coded high and low pressure hoses
- Electronic oil failure control
- Horizontal receiver
- Receiver isolation valves
- Refrigerant relief valve
- Replaceable core liquid line filter
- Suction line and discharge line vibrasorbers
- Liquid line isolation valve with sight glass
- Single point alarm with liquid line solenoid lockout
- Control circuit and condenser fan fusing
- Condenser fan contactors
- UL and cUL listed for outdoor use

- **Flooded (KF) Models** include an adjustable head pressure control valve
- **Non-Flooded (KB) Models** include electronic fan cycling control and a minimum charge monitor
- **Parallel Compressor Models (KF*P/ KB*P)** include an oil management system

^ Also available with Copeland Discus™ compressor - see separate QV-Series brochure (KM-QVX) for information

MODEL NUMBER NOMENCLATURE

K	F	B	V	30	M	4S	G
Brand	**Model Style**	**Compressor Type**	**Configuration**	**Horsepower**	**Temperature Range**	**Refrigerant Type**	**Voltage^**
K = Kramer	B = Non-Flooded F = Flooded	B = Bitzer Ecoline	V = Single Compressor D = Dual Piping P = Parallel Piping		M = Medium Temp. L = Low Temp.	4S = Multiple Refrigerants (R404A, R407A, R407C, R407F, R448A, R449A/B)	E = 208-230/3/60 G = 460/3/60

Note: ^ 50 Hz available. Contact Factory for additional information.

Options

- EC fan motors for variable speed
- Air defrost timer or electric defrost components
- Electric defrost kits available for up to 4 evaporators
- Oversized receiver
- ElectroFin© or Bronz-Glow coil coating
- Liquid injection on low temp. compressors
- Heated and insulated receiver
- Oil separator with check valve
- Fan cycling control (RF models)
- Suction accumulator
- Liquid filter isolation valve
- Liquid line solenoid valve (Shipped loose)
- Suction isolation valve
- Suction filter isolation valve
- Replaceable core suction filter
- Crankcase pressure regulator
- Hot gas bypass (Discharge tee, regulator or ball valve)
- Heat reclaim (Sporlan 3 way valve)
- Thru-the-door non-fused disconnect switch
- Thru-the-door fused disconnect (200 amp Max)
- Thru-the-door breaker disconnect (200 amp Max)
- Phase loss monitor
- Anti short cycle timer
- Compressor unloading

	Features and Options		
	DESCRIPTION	KF FLOODED MODELS	KB NON-FLOODED MODELS
GENERAL CONSTRUCTION	Vertical air discharge configuration	STANDARD	
	Prepaint gray exterior/G60 Galvanized outdoor cabinet construction	STANDARD	
	G90 Galvanized frame	STANDARD	
	High and low voltage electrical panels with hinged door	STANDARD	
	Single point electrical connection	STANDARD	
CONDENSER COIL AND FANS	Award-winning floating coil design	STANDARD	
	Copper tubes mechanically expanded into aluminum fins	STANDARD	
	Subcooling circuit	STANDARD	
	Flip top condenser fan venturi(s)	STANDARD	
	Swept wing fan blades for optional air flow	STANDARD	
	Enhanced tube	STANDARD	
	Adjustable flooded head pressure control valve	STANDARD	N/A
COIL COATINGS	ElectroFin® or Bronz-Glow	OPTIONAL	
COMPRESSORS	Crankcase heater	STANDARD	
	Electronic oil failure control	STANDARD	
	Suction line and discharge line vibrasorbers	STANDARD	
	Floored compressor cabinet with removable compressor tray	STANDARD	
	Compressor unloading with suction pressure contactor (max steps)	OPTIONAL	
	Liquid injection on low temp. compressors	OPTIONAL	
ELECTRICAL AND CONTROL PANEL	3 Phase condenser fan motors	STANDARD	
	EC fan motors with electronic variable speed control	OPTIONAL	
	Hinged and removable access panels	STANDARD	
	Condenser fan contactors	STANDARD	
	Control circuit and condenser fan fuses	STANDARD	
	Control circuit and condenser fan breakers	OPTIONAL	
	Thru-the-door non-fused disconnect (200 amp Max)	OPTIONAL	
	Thru-the-door fused disconnect (200 amp Max)	OPTIONAL	
	Thru-the-door breaker disconnect (200 amp Max)	OPTIONAL	
	Phase loss monitor (Symcom 250A or ICM450)	OPTIONAL	
	Air defrost time clock	OPTIONAL	
	Up to 4 evaporators electric defrost kit	OPTIONAL	
	Single point alarm with liquid line solenoid lockout	STANDARD	
	Anti short cycle timer	OPTIONAL	
	Pump down switch	STANDARD	
	208-230 Control voltage	STANDARD	
	Service and control LED control panel lighting (Panel door switch/service toggle)	STANDARD	
	110 VAC 20 Amp convenience outlet	STANDARD	
REFRIGERATION	High and low pressure controls (with color-coded hose connections)	STANDARD	
	Horizontal receiver	STANDARD	
	Receiver isolation valve	STANDARD	
	Refrigerant relief valve	STANDARD	
	Replaceable core liquid line filter	STANDARD	
	Sight glass	STANDARD	
	Heated and insulated receiver	OPTIONAL	
	Oil separator with check valve	OPTIONAL	
	Oil management system on Parallel Compressor Configurations	STANDARD PARALLEL	
	Oversize receiver	OPTIONAL	
	Color-coded refrigerant hoses (red and blue)	STANDARD	
	Suction accumulator	OPTIONAL	
	Boil out suction accumulator	OPTIONAL	
	Liquid line isolation valve with sight glass	STANDARD	
	Liquid filter isolation valve	OPTIONAL	
	Liquid line solenoid valve (Shipped loose)	OPTIONAL	
	Suction isolation valve	OPTIONAL	
	Suction filter isolation valve	OPTIONAL	
	Replaceable core suction filter	OPTIONAL	
	Hot gas bypass (Discharge tee, regulator or ball valve)	OPTIONAL	
	Heat reclaim (Sporlan 3 way valve)	OPTIONAL	
	Crankcase pressure regulator	OPTIONAL	
	Electronic fan cycling control	OPTIONAL	STANDARD
	Minimum charge monitor	N/A	OPTIONAL
	Receiver level gauge	OPTIONAL	

Capacity Data (BTUH) - Med. Temp. R404A Bitzer - Single Compressor - 60 Hz‡

SUCTION TEMPERATURE

MODEL	COMP. MODEL	45	40	35	30	25	20	10	0	-10
90°F Ambient										
K*BV015M4S*	4NE-20	239,500	220,700	202,000	183,600	167,900	152,200	123,900	98,600	76,200
K*BV020M4S*	4JE-22	258,600	240,100	220,500	201,300	184,600	168,500	137,200	110,200	85,700
K*BV025M4S*	4HE-25	292,500	271,900	250,600	229,300	210,700	192,400	158,600	128,000	100,600
K*BV030M4S*	4GE-30	343,600	318,800	294,200	269,200	247,600	227,400	186,500	150,600	118,200
K*BV035M4S*	6HE-35	447,700	415,800	382,200	349,500	321,100	292,600	240,300	194,200	151,800
K*BV040M4S*	6GE-40	491,700	457,200	421,200	386,900	356,500	327,200	269,200	217,900	171,300
K*BV050M4S*	6FE-50	566,600	529,900	489,500	451,400	417,700	384,300	318,200	259,500	205,200
95°F Ambient										
K*BV015M4S*	4NE-20	227,800	210,600	192,500	174,900	159,400	144,300	117,300	92,900	71,300
K*BV020M4S*	4JE-22	247,800	229,400	210,100	191,600	175,500	160,600	129,700	103,900	80,000
K*BV025M4S*	4HE-25	279,200	259,300	238,500	218,200	200,300	182,700	150,300	121,600	94,500
K*BV030M4S*	4GE-30	324,600	301,600	276,500	253,800	233,300	213,000	175,100	140,900	110,400
K*BV035M4S*	6HE-35	424,200	393,000	361,200	329,600	302,100	276,700	225,500	181,100	140,700
K*BV040M4S*	6GE-40	464,000	432,000	396,900	363,800	335,200	306,600	252,400	204,500	160,000
K*BV050M4S*	6FE-50	539,900	504,200	465,900	429,100	396,200	363,200	301,600	245,200	193,500
100°F Ambient										
K*BV015M4S*	4NE-20	–	200,600	182,800	165,900	151,100	137,200	110,600	87,400	67,000
K*BV020M4S*	4JE-22	–	218,100	199,700	181,800	166,200	151,400	123,000	97,600	75,100
K*BV025M4S*	4HE-25	–	246,700	226,300	206,800	190,000	173,100	142,500	114,000	88,700
K*BV030M4S*	4GE-30	–	286,900	262,900	240,700	221,000	201,600	165,700	132,900	103,800
K*BV035M4S*	6HE-35	–	374,500	343,200	313,000	286,800	260,700	213,300	170,400	132,200
K*BV040M4S*	6GE-40	–	410,200	377,500	345,100	317,800	290,200	238,500	192,100	150,600
K*BV050M4S*	6FE-50	–	478,900	441,800	406,600	374,800	343,600	285,300	231,000	181,800
110°F Ambient										
K*BV015M4S*	4NE-20	–	–	164,300	149,000	135,100	121,900	97,700	76,500	58,000
K*BV020M4S*	4JE-22	–	–	179,200	163,000	148,600	134,400	108,500	85,200	64,700
K*BV025M4S*	4HE-25	–	–	202,500	185,700	169,700	153,100	125,700	100,200	76,900
K*BV030M4S*	4GE-30	–	–	235,000	215,300	197,300	178,800	147,200	117,400	91,100
K*BV035M4S*	6HE-35	–	–	308,200	280,500	256,900	232,800	188,800	149,600	114,800
K*BV040M4S*	6GE-40	–	–	337,100	308,400	282,900	257,700	211,200	168,800	130,900
K*BV050M4S*	6FE-50	–	–	395,100	362,700	333,800	305,400	251,900	203,000	158,200

* Each asterisk represents a variable character based upon model and voltage ordered. See page 2 for nomenclature.

All capacities are calculated at 65°F return gas temperature and dew point values.

‡ Multiply capacity by .83 when used with 50 Hz power.

Capacity Data (BTUH) - Med. Temp. R407A, R407F Bitzer - Single Compressor - 60 Hz‡

SUCTION TEMPERATURE

MODEL	COMP. MODEL	45	40	35	30	25	20	10	0	-10
90°F Ambient										
K*BV015M4S*	4NE-20	211,700	191,500	175,500	160,300	146,100	133,000	106,500	83,000	63,200
K*BV020M4S*	4JE-22	228,800	207,300	190,300	173,800	158,800	144,800	115,900	90,100	67,900
K*BV025M4S*	4HE-25	279,500	255,100	231,300	211,100	192,400	174,900	139,500	108,100	80,500
K*BV030M4S*	4GE-30	324,900	297,100	269,800	246,800	221,500	203,900	164,700	128,700	97,400
K*BV035M4S*	6HE-35	428,600	390,700	354,700	323,900	294,500	266,600	214,800	166,700	126,500
K*BV040M4S*	6GE-40	480,600	439,300	398,700	365,300	333,100	301,900	244,300	190,800	145,100
K*BV050M4S*	6FE-50	557,100	510,400	464,800	426,200	389,800	353,300	286,600	225,300	171,300
95°F Ambient										
K*BV015M4S*	4NE-20	203,400	183,800	168,300	153,500	139,800	127,000	101,800	78,700	59,600
K*BV020M4S*	4JE-22	219,800	198,900	182,400	166,600	151,800	138,000	110,000	85,200	63,800
K*BV025M4S*	4HE-25	268,600	242,500	221,700	202,500	183,700	167,000	132,600	102,200	76,000
K*BV030M4S*	4GE-30	312,500	282,900	259,200	235,800	215,500	196,400	157,700	122,100	91,300
K*BV035M4S*	6HE-35	411,300	375,100	339,800	310,200	281,700	256,500	205,100	158,500	118,700
K*BV040M4S*	6GE-40	461,400	421,600	383,100	349,800	319,100	288,900	233,700	181,100	136,800
K*BV050M4S*	6FE-50	535,500	490,400	446,000	408,500	373,200	340,200	273,300	213,500	162,000
100°F Ambient										
K*BV015M4S*	4NE-20	–	176,500	161,200	146,800	133,500	121,100	96,700	74,300	55,800
K*BV020M4S*	4JE-22	–	190,600	174,600	159,200	144,700	131,400	104,300	80,400	59,800
K*BV025M4S*	4HE-25	–	232,400	212,400	192,900	175,300	159,000	126,100	96,300	71,100
K*BV030M4S*	4GE-30	–	271,500	248,500	226,400	206,400	187,500	150,000	115,700	86,800
K*BV035M4S*	6HE-35	–	356,800	323,100	294,500	267,000	242,400	192,800	148,000	110,200
K*BV040M4S*	6GE-40	–	405,000	366,800	335,100	304,800	275,200	221,900	171,400	128,600
K*BV050M4S*	6FE-50	–	473,900	431,200	394,500	360,100	327,900	264,500	204,500	154,900
110°F Ambient										
K*BV015M4S*	4NE-20	–	–	146,800	133,300	121,000	109,400	86,100	65,700	48,800
K*BV020M4S*	4JE-22	–	–	159,100	144,600	131,100	118,600	93,200	70,700	51,800
K*BV025M4S*	4HE-25	–	–	193,300	175,500	158,900	143,500	112,100	84,800	61,700
K*BV030M4S*	4GE-30	–	–	227,000	206,600	187,600	170,000	134,100	102,900	76,000
K*BV035M4S*	6HE-35	–	–	298,000	270,400	245,200	221,500	175,900	132,900	98,400
K*BV040M4S*	6GE-40	–	–	335,400	305,200	277,800	251,400	198,600	152,300	113,200
K*BV050M4S*	6FE-50	–	–	390,700	355,800	324,200	294,100	233,800	179,400	133,900

* Each asterisk represents a variable character based upon model and voltage ordered. See page 2 for nomenclature.

All capacities are calculated at 65°F return gas temperature and dew point values.

‡ Multiply capacity by .83 when used with 50 Hz power.

Head fan required.

Capacity Data (BTUH) - Med. Temp. R407C Bitzer - Single Compressor - 60 Hz‡

SUCTION TEMPERATURE

MODEL	COMP. MODEL	45	40	35	30	25	20	10	0	-10
90°F Ambient										
K*BV015M4S*	4NE-20	203,000	183,600	168,200	153,400	139,900	127,200	101,600	79,000	59,600
K*BV020M4S*	4JE-22	238,100	217,200	196,000	177,800	161,700	146,600	115,900	88,000	64,200
K*BV025M4S*	4HE-25	273,400	251,800	226,700	206,600	188,300	170,800	136,000	104,700	76,900
K*BV030M4S*	4GE-30	324,400	299,100	268,900	246,800	220,900	202,700	163,400	127,000	95,800
K*BV035M4S*	6HE-35	407,100	368,500	335,500	305,300	278,100	250,600	201,200	155,800	118,700
K*BV040M4S*	6GE-40	466,700	422,900	386,900	355,500	323,500	293,200	237,200	187,000	143,800
K*BV050M4S*	6FE-50	538,100	490,900	447,300	409,700	373,200	336,100	275,600	215,200	163,500
95°F Ambient										
K*BV015M4S*	4NE-20	195,000	176,200	161,300	146,900	133,900	121,500	97,100	74,900	56,200
K*BV020M4S*	4JE-22	228,700	208,400	187,900	170,400	154,600	139,700	110,000	83,200	60,300
K*BV025M4S*	4HE-25	262,700	239,400	217,300	198,200	179,800	163,100	129,300	99,000	72,600
K*BV030M4S*	4GE-30	312,000	284,800	258,300	235,800	214,900	195,200	156,500	120,500	89,800
K*BV035M4S*	6HE-35	390,700	353,800	321,400	292,400	266,000	241,100	192,100	148,100	111,400
K*BV040M4S*	6GE-40	448,100	405,900	371,800	340,400	309,900	280,600	226,900	177,500	135,600
K*BV050M4S*	6FE-50	517,200	471,700	429,200	392,700	357,300	323,600	262,800	203,900	154,600
100°F Ambient										
K*BV015M4S*	4NE-20	–	169,200	154,500	140,500	127,900	115,900	92,200	70,700	52,600
K*BV020M4S*	4JE-22	–	199,700	179,900	162,800	147,400	133,000	104,300	78,500	56,500
K*BV025M4S*	4HE-25	–	229,400	208,200	188,800	171,600	155,300	123,000	93,300	67,900
K*BV030M4S*	4GE-30	–	273,300	247,600	226,400	205,800	186,400	148,900	114,200	85,400
K*BV035M4S*	6HE-35	–	336,500	305,600	277,600	252,100	227,800	180,600	138,300	103,400
K*BV040M4S*	6GE-40	–	389,900	356,000	326,100	296,000	267,300	215,400	168,000	127,500
K*BV050M4S*	6FE-50	–	455,800	415,000	379,200	344,800	311,900	254,300	195,300	147,800
110°F Ambient										
K*BV015M4S*	4NE-20	–	–	140,700	127,600	115,900	104,700	82,100	62,500	46,000
K*BV020M4S*	4JE-22	–	–	163,900	147,900	133,500	120,100	93,200	69,000	49,000
K*BV025M4S*	4HE-25	–	–	189,500	171,800	155,500	140,100	109,300	82,100	58,900
K*BV030M4S*	4GE-30	–	–	226,200	206,600	187,100	169,000	133,100	101,600	74,800
K*BV035M4S*	6HE-35	–	–	281,900	254,900	231,500	208,200	164,800	124,200	92,300
K*BV040M4S*	6GE-40	–	–	325,500	297,000	269,800	244,200	192,800	149,300	112,200
K*BV050M4S*	6FE-50	–	–	376,000	342,000	310,400	279,700	224,800	171,300	127,800

* Each asterisk represents a variable character based upon model and voltage ordered. See page 2 for nomenclature.
All capacities are calculated at 65°F return gas temperature and dew point values.
‡ Multiply capacity by .83 when used with 50 Hz power.
Head fan required.

Capacity Data (BTUH) - Med. Temp. R448A, R449A/B Bitzer - Single Compressor - 60 Hz‡

SUCTION TEMPERATURE

MODEL	COMP. MODEL	45	40	35	30	25	20	10	0	-10
90°F Ambient										
K*BV015M4S*	4NE-20	216,900	198,300	179,900	164,800	150,000	136,600	109,700	86,100	66,400
K*BV020M4S*	4JE-22	251,100	229,700	208,100	190,500	174,000	158,500	128,000	99,900	76,200
K*BV025M4S*	4HE-25	285,100	264,100	238,900	218,600	200,900	183,200	149,400	118,100	91,000
K*BV030M4S*	4GE-30	329,600	305,300	276,000	254,800	228,800	211,100	172,600	137,400	107,500
K*BV035M4S*	6HE-35	431,300	393,900	359,800	329,400	300,600	272,300	222,000	175,100	136,300
K*BV040M4S*	6GE-40	476,600	437,400	398,400	368,500	336,900	306,900	251,500	200,600	157,300
K*BV050M4S*	6FE-50	557,100	513,500	470,300	435,100	400,600	365,600	302,500	242,300	188,900
95°F Ambient										
K*BV015M4S*	4NE-20	208,400	190,300	172,500	157,800	143,500	130,400	104,900	81,600	62,600
K*BV020M4S*	4JE-22	241,200	220,400	199,500	182,600	166,300	151,100	121,500	94,500	71,600
K*BV025M4S*	4HE-25	274,000	251,100	229,000	209,700	191,800	174,900	142,000	111,700	85,900
K*BV030M4S*	4GE-30	317,000	290,700	265,200	243,400	222,600	203,300	165,300	130,400	100,800
K*BV035M4S*	6HE-35	413,900	378,200	344,700	315,500	287,500	262,000	212,000	166,500	127,900
K*BV040M4S*	6GE-40	457,600	419,800	382,800	352,900	322,700	293,700	240,600	190,400	148,300
K*BV050M4S*	6FE-50	535,500	493,400	451,300	417,000	383,500	352,000	288,500	229,600	178,600
100°F Ambient										
K*BV015M4S*	4NE-20	–	182,700	165,200	150,900	137,000	124,300	99,600	77,000	58,600
K*BV020M4S*	4JE-22	–	211,200	191,000	174,500	158,500	143,900	115,200	89,200	67,100
K*BV025M4S*	4HE-25	–	240,600	219,400	199,800	183,000	166,500	135,000	105,300	80,400
K*BV030M4S*	4GE-30	–	279,000	254,300	233,700	213,200	194,100	157,200	123,600	95,800
K*BV035M4S*	6HE-35	–	359,700	327,800	299,500	272,500	247,600	199,300	155,500	118,700
K*BV040M4S*	6GE-40	–	403,300	366,500	338,100	308,200	279,800	228,500	180,200	139,400
K*BV050M4S*	6FE-50	–	476,800	436,300	402,700	370,000	339,300	279,200	219,900	170,800
110°F Ambient										
K*BV015M4S*	4NE-20	–	–	150,500	137,000	124,200	112,300	88,700	68,100	51,300
K*BV020M4S*	4JE-22	–	–	174,000	158,500	143,600	129,900	102,900	78,400	58,100
K*BV025M4S*	4HE-25	–	–	199,700	181,700	165,900	150,300	120,000	92,700	69,700
K*BV030M4S*	4GE-30	–	–	232,300	213,300	193,800	176,000	140,600	109,900	83,900
K*BV035M4S*	6HE-35	–	–	302,300	275,000	250,200	226,200	181,800	139,600	106,000
K*BV040M4S*	6GE-40	–	–	335,100	307,900	280,900	255,600	204,500	160,100	122,700
K*BV050M4S*	6FE-50	–	–	395,300	363,200	333,100	304,300	246,800	192,900	147,600

* Each asterisk represents a variable character based upon model and voltage ordered. See page 2 for nomenclature.
All capacities are calculated at 65°F return gas temperature and dew point values.
‡ Multiply capacity by .83 when used with 50 Hz power.
Head fan required.

Swept wing fans improve air flow and diminish sound output

Stud mounted motors make for easier motor changes

Capacity Data (BTUH) - Med. Temp. R404A Bitzer - Dual Compressor - 60 Hz‡

SUCTION TEMPERATURE

MODEL	COMP. MODEL	45	40	35	30	25	20	10	0	-10
90°F Ambient										
K*BD030M4S*	(2) 4NE-20	479,000	441,400	404,000	367,200	335,800	304,400	247,800	197,200	152,400
K*BD040M4S*	(2) 4JE-22	517,200	480,200	441,000	402,600	369,200	337,000	274,400	220,400	171,400
K*BD050M4S*	(2) 4HE-25	585,000	543,800	501,200	458,600	421,400	384,800	317,200	256,000	201,200
K*BD060M4S*	(2) 4GE-30	687,200	637,600	588,400	538,400	495,200	454,800	373,000	301,200	236,400
K*BD070M4S*	(2) 6HE-35	895,400	831,600	764,400	699,000	642,200	585,200	480,600	388,400	303,600
K*BD080M4S*	(2) 6GE-40	983,400	914,400	842,400	773,800	713,000	654,400	538,400	435,800	342,600
K*BD100M4S*	(2) 6FE-50	1,133,200	1,059,800	979,000	902,800	835,400	768,600	636,400	519,000	410,400
95°F Ambient										
K*BD030M4S*	(2) 4NE-20	455,600	421,200	385,000	349,800	318,800	288,600	234,600	185,800	142,600
K*BD040M4S*	(2) 4JE-22	495,600	458,800	420,200	383,200	351,000	321,200	259,400	207,800	160,000
K*BD050M4S*	(2) 4HE-25	558,400	518,600	477,000	436,400	400,600	365,400	300,600	243,200	189,000
K*BD060M4S*	(2) 4GE-30	649,200	603,200	553,000	507,600	466,600	426,000	350,200	281,800	220,800
K*BD070M4S*	(2) 6HE-35	848,400	786,000	722,400	659,200	604,200	553,400	451,000	362,200	281,400
K*BD080M4S*	(2) 6GE-40	928,000	864,000	793,800	727,600	670,400	613,200	504,800	409,000	320,000
K*BD100M4S*	(2) 6FE-50	1,079,800	1,008,400	931,800	858,200	792,400	726,400	603,200	490,400	387,000
100°F Ambient										
K*BD030M4S*	(2) 4NE-20	–	401,200	365,600	331,800	302,200	274,400	221,200	174,800	134,000
K*BD040M4S*	(2) 4JE-22	–	436,200	399,400	363,600	332,400	302,800	246,000	195,200	150,200
K*BD050M4S*	(2) 4HE-25	–	493,400	452,600	413,600	380,000	346,200	285,000	228,000	177,400
K*BD060M4S*	(2) 4GE-30	–	573,800	525,800	481,400	442,000	403,200	331,400	265,800	207,600
K*BD070M4S*	(2) 6HE-35	–	749,000	686,400	626,000	573,600	521,400	426,600	340,800	264,400
K*BD080M4S*	(2) 6GE-40	–	820,400	755,000	690,200	635,600	580,400	477,000	384,200	301,200
K*BD100M4S*	(2) 6FE-50	–	957,800	883,600	813,200	749,600	687,200	570,600	462,000	363,600
110°F Ambient										
K*BD030M4S*	(2) 4NE-20	–	–	328,600	298,000	270,200	243,800	195,400	153,000	116,000
K*BD040M4S*	(2) 4JE-22	–	–	358,400	326,000	297,200	268,800	217,000	170,400	129,400
K*BD050M4S*	(2) 4HE-25	–	–	405,000	371,400	339,400	306,200	251,400	200,400	153,800
K*BD060M4S*	(2) 4GE-30	–	–	470,000	430,600	394,600	357,600	294,400	234,800	182,200
K*BD070M4S*	(2) 6HE-35	–	–	616,400	561,000	513,800	465,600	377,600	299,200	229,600
K*BD080M4S*	(2) 6GE-40	–	–	674,200	616,800	565,800	515,400	422,400	337,600	261,800
K*BD100M4S*	(2) 6FE-50	–	–	790,200	725,400	667,600	610,800	503,800	406,000	316,400

* Each asterisk represents a variable character based upon model and voltage ordered. See page 2 for nomenclature.

All capacities are calculated at 65°F return gas temperature and dew point values.

‡ Multiply capacity by .83 when used with 50 Hz power.

Capacity Data (BTUH) - Med. Temp. R407A, R407F Bitzer - Dual Compressor - 60 Hz‡

SUCTION TEMPERATURE

MODEL	COMP. MODEL	45	40	35	30	25	20	10	0	-10
90°F Ambient										
K*BD030M4S*	(2) 4NE-20	423,400	383,000	351,000	320,600	292,200	266,000	213,000	166,000	126,400
K*BD040M4S*	(2) 4JE-22	457,600	414,600	380,600	347,600	317,600	289,600	231,800	180,200	135,800
K*BD050M4S*	(2) 4HE-25	559,000	510,200	462,600	422,200	384,800	349,800	279,000	216,200	161,000
K*BD060M4S*	(2) 4GE-30	649,800	594,200	539,600	493,600	443,000	407,800	329,400	257,400	194,800
K*BD070M4S*	(2) 6HE-35	857,200	781,400	709,400	647,800	589,000	533,200	429,600	333,400	253,000
K*BD080M4S*	(2) 6GE-40	961,200	878,600	797,400	730,600	666,200	603,800	488,600	381,600	290,200
K*BD100M4S*	(2) 6FE-50	1,114,200	1,020,800	929,600	852,400	779,600	706,600	573,200	450,600	342,600
95°F Ambient										
K*BD030M4S*	(2) 4NE-20	406,800	367,600	336,600	307,000	279,600	254,000	203,600	157,400	119,200
K*BD040M4S*	(2) 4JE-22	439,600	397,800	364,800	333,200	303,600	276,000	220,000	170,400	127,600
K*BD050M4S*	(2) 4HE-25	537,200	485,000	443,400	405,000	367,400	334,000	265,200	204,400	152,000
K*BD060M4S*	(2) 4GE-30	625,000	565,800	518,400	471,600	431,000	392,800	315,400	244,200	182,600
K*BD070M4S*	(2) 6HE-35	822,600	750,200	679,600	620,400	563,400	513,000	410,200	317,000	237,400
K*BD080M4S*	(2) 6GE-40	922,800	843,200	766,200	699,600	638,200	577,800	467,400	362,200	273,600
K*BD100M4S*	(2) 6FE-50	1,071,000	980,800	892,000	817,000	746,400	680,400	546,600	427,000	324,000
100°F Ambient										
K*BD030M4S*	(2) 4NE-20	–	353,000	322,400	293,600	267,000	242,200	193,400	148,600	111,600
K*BD040M4S*	(2) 4JE-22	–	381,200	349,200	318,400	289,400	262,800	208,600	160,800	119,600
K*BD050M4S*	(2) 4HE-25	–	464,800	424,800	385,800	350,600	318,000	252,200	192,600	142,200
K*BD060M4S*	(2) 4GE-30	–	543,000	497,000	452,800	412,800	375,000	300,000	231,400	173,600
K*BD070M4S*	(2) 6HE-35	–	713,600	646,200	589,000	534,000	484,800	385,600	296,000	220,400
K*BD080M4S*	(2) 6GE-40	–	810,000	733,600	670,200	609,600	550,400	443,800	342,800	257,200
K*BD100M4S*	(2) 6FE-50	–	947,800	862,400	789,000	720,200	655,800	529,000	409,000	309,800
110°F Ambient										
K*BD030M4S*	(2) 4NE-20	–	–	293,600	266,600	242,000	218,800	172,200	131,400	97,600
K*BD040M4S*	(2) 4JE-22	–	–	318,200	289,200	262,200	237,200	186,400	141,400	103,600
K*BD050M4S*	(2) 4HE-25	–	–	386,600	351,000	317,800	287,000	224,200	169,600	123,400
K*BD060M4S*	(2) 4GE-30	–	–	454,000	413,200	375,200	340,000	268,200	205,800	152,000
K*BD070M4S*	(2) 6HE-35	–	–	596,000	540,800	490,400	443,000	351,800	265,800	196,800
K*BD080M4S*	(2) 6GE-40	–	–	670,800	610,400	555,600	502,800	397,200	304,600	226,400
K*BD100M4S*	(2) 6FE-50	–	–	781,400	711,600	648,400	588,200	467,600	358,800	267,800

* Each asterisk represents a variable character based upon model and voltage ordered. See page 2 for nomenclature.

All capacities are calculated at 65°F return gas temperature and dew point values.

‡ Multiply capacity by .83 when used with 50 Hz power.

Head fan required.

Capacity Data (BTUH) - Med. Temp. R407C Bitzer - Dual Compressor - 60 Hz‡

SUCTION TEMPERATURE

MODEL	COMP. MODEL	45	40	35	30	25	20	10	0	-10
90°F Ambient										
K*BD030M4S*	(2) 4NE-20	406,000	367,200	336,400	306,800	279,800	254,400	203,200	158,000	119,200
K*BD040M4S*	(2) 4JE-22	476,200	434,400	392,000	355,600	323,400	293,200	231,800	176,000	128,400
K*BD050M4S*	(2) 4HE-25	546,800	503,600	453,400	413,200	376,600	341,600	272,000	209,400	153,800
K*BD060M4S*	(2) 4GE-30	648,800	598,200	537,800	493,600	441,800	405,400	326,800	254,000	191,600
K*BD070M4S*	(2) 6HE-35	814,200	737,000	671,000	610,600	556,200	501,200	402,400	311,600	237,400
K*BD080M4S*	(2) 6GE-40	933,400	845,800	773,800	711,000	647,000	586,400	474,400	374,000	287,600
K*BD100M4S*	(2) 6FE-50	1,076,200	981,800	894,600	819,400	746,400	672,200	551,200	430,400	327,000
95°F Ambient										
K*BD030M4S*	(2) 4NE-20	390,000	352,400	322,600	293,800	267,800	243,000	194,200	149,800	112,400
K*BD040M4S*	(2) 4JE-22	457,400	416,800	375,800	340,800	309,200	279,400	220,000	166,400	120,600
K*BD050M4S*	(2) 4HE-25	525,400	478,800	434,600	396,400	359,600	326,200	258,600	198,000	145,200
K*BD060M4S*	(2) 4GE-30	624,000	569,600	516,600	471,600	429,800	390,400	313,000	241,000	179,600
K*BD070M4S*	(2) 6HE-35	781,400	707,600	642,800	584,800	532,000	482,200	384,200	296,200	222,800
K*BD080M4S*	(2) 6GE-40	896,200	811,800	743,600	680,800	619,800	561,200	453,800	355,000	271,200
K*BD100M4S*	(2) 6FE-50	1,034,400	943,400	858,400	785,400	714,600	647,200	525,600	407,800	309,200
100°F Ambient										
K*BD030M4S*	(2) 4NE-20	–	338,400	309,000	281,000	255,800	231,800	184,400	141,400	105,200
K*BD040M4S*	(2) 4JE-22	–	399,400	359,800	325,600	294,800	266,000	208,600	157,000	113,000
K*BD050M4S*	(2) 4HE-25	–	458,800	416,400	377,600	343,200	310,600	246,000	186,600	135,800
K*BD060M4S*	(2) 4GE-30	–	546,600	495,200	452,800	411,600	372,800	297,800	228,400	170,800
K*BD070M4S*	(2) 6HE-35	–	673,000	611,200	555,200	504,200	455,600	361,200	276,600	206,800
K*BD080M4S*	(2) 6GE-40	–	779,800	712,000	652,200	592,000	534,600	430,800	336,000	255,000
K*BD100M4S*	(2) 6FE-50	–	911,600	830,000	758,400	689,600	623,800	508,600	390,600	295,600
110°F Ambient										
K*BD030M4S*	(2) 4NE-20	–	–	281,400	255,200	231,800	209,400	164,200	125,000	92,000
K*BD040M4S*	(2) 4JE-22	–	–	327,800	295,800	267,000	240,200	186,400	138,000	98,000
K*BD050M4S*	(2) 4HE-25	–	–	379,000	343,600	311,000	280,200	218,600	164,200	117,800
K*BD060M4S*	(2) 4GE-30	–	–	452,400	413,200	374,200	338,000	266,200	203,200	149,600
K*BD070M4S*	(2) 6HE-35	–	–	563,800	509,800	463,000	416,400	329,600	248,400	184,600
K*BD080M4S*	(2) 6GE-40	–	–	651,000	594,000	539,600	488,400	385,600	298,600	224,400
K*BD100M4S*	(2) 6FE-50	–	–	752,000	684,000	620,800	559,400	449,600	342,600	255,600

* Each asterisk represents a variable character based upon model and voltage ordered. See page 2 for nomenclature.

All capacities are calculated at 65°F return gas temperature and dew point values.

‡ Multiply capacity by .83 when used with 50 Hz power.

Head fan required.

Capacity Data (BTUH) - Med. Temp. R448A, R449A/B Bitzer - Dual Compressor - 60 Hz‡

SUCTION TEMPERATURE

MODEL	COMP. MODEL	45	40	35	30	25	20	10	0	-10
90°F Ambient										
K*BD030M4S*	(2) 4NE-20	433,800	396,600	359,800	329,600	300,000	273,200	219,400	172,200	132,800
K*BD040M4S*	(2) 4JE-22	502,200	459,400	416,200	381,000	348,000	317,000	256,000	199,800	152,400
K*BD050M4S*	(2) 4HE-25	570,200	528,200	477,800	437,200	401,800	366,400	298,800	236,200	182,000
K*BD060M4S*	(2) 4GE-30	659,200	610,600	552,000	509,600	457,600	422,200	345,200	274,800	215,000
K*BD070M4S*	(2) 6HE-35	862,600	787,800	719,600	658,800	601,200	544,600	444,000	350,200	272,600
K*BD080M4S*	(2) 6GE-40	953,200	874,800	796,800	737,000	673,800	613,800	503,000	401,200	314,600
K*BD100M4S*	(2) 6FE-50	1,114,200	1,027,000	940,600	870,200	801,200	731,200	605,000	484,600	377,800
95°F Ambient										
K*BD030M4S*	(2) 4NE-20	416,800	380,600	345,000	315,600	287,000	260,800	209,800	163,200	125,200
K*BD040M4S*	(2) 4JE-22	482,400	440,800	399,000	365,200	332,600	302,200	243,000	189,000	143,200
K*BD050M4S*	(2) 4HE-25	548,000	502,200	458,000	419,400	383,600	349,800	284,000	223,400	171,800
K*BD060M4S*	(2) 4GE-30	634,000	581,400	530,400	486,800	445,200	406,600	330,600	260,800	201,600
K*BD070M4S*	(2) 6HE-35	827,800	756,400	689,400	631,000	575,000	524,000	424,000	333,000	255,800
K*BD080M4S*	(2) 6GE-40	915,200	839,600	765,600	705,800	645,400	587,400	481,200	380,800	296,600
K*BD100M4S*	(2) 6FE-50	1,071,000	986,800	902,600	834,000	767,000	704,000	577,000	459,200	357,200
100°F Ambient										
K*BD030M4S*	(2) 4NE-20	–	365,400	330,400	301,800	274,000	248,600	199,200	154,000	117,200
K*BD040M4S*	(2) 4JE-22	–	422,400	382,000	349,000	317,000	287,800	230,400	178,400	134,200
K*BD050M4S*	(2) 4HE-25	–	481,200	438,800	399,600	366,000	333,000	270,000	210,600	160,800
K*BD060M4S*	(2) 4GE-30	–	558,000	508,600	467,400	426,400	388,200	314,400	247,200	191,600
K*BD070M4S*	(2) 6HE-35	–	719,400	655,600	599,000	545,000	495,200	398,600	311,000	237,400
K*BD080M4S*	(2) 6GE-40	–	806,600	733,000	676,200	616,400	559,600	457,000	360,400	278,800
K*BD100M4S*	(2) 6FE-50	–	953,600	872,600	805,400	740,000	678,600	558,400	439,800	341,600
110°F Ambient										
K*BD030M4S*	(2) 4NE-20	–	–	301,000	274,000	248,400	224,600	177,400	136,200	102,600
K*BD040M4S*	(2) 4JE-22	–	–	348,000	317,000	287,200	259,800	205,800	156,800	116,200
K*BD050M4S*	(2) 4HE-25	–	–	399,400	363,400	331,800	300,600	240,000	185,400	139,400
K*BD060M4S*	(2) 4GE-30	–	–	464,600	426,600	387,600	352,000	281,200	219,800	167,800
K*BD070M4S*	(2) 6HE-35	–	–	604,600	550,000	500,400	452,400	363,600	279,200	212,000
K*BD080M4S*	(2) 6GE-40	–	–	670,200	615,800	561,800	511,200	409,000	320,200	245,400
K*BD100M4S*	(2) 6FE-50	–	–	790,600	726,400	666,200	608,600	493,600	385,800	295,200

* Each asterisk represents a variable character based upon model and voltage ordered. See page 2 for nomenclature.

All capacities are calculated at 65°F return gas temperature and dew point values.

‡ Multiply capacity by .83 when used with 50 Hz power.

Head fan required.

Capacity Data (BTUH) - Med. Temp. R404A Bitzer - Parallel Compressor - 60 Hz‡

SUCTION TEMPERATURE

MODEL	COMP. MODEL	45	40	35	30	25	20	10	0	-10
90°F Ambient										
K*BP050M4S*	(2) 4HE-25	585,000	543,800	501,200	458,600	421,400	384,800	317,200	256,000	201,200
K*BP060M4S*	(2) 4GE-30	687,200	637,600	588,400	538,400	495,200	454,800	373,000	301,200	236,400
K*BP070M4S*	(2) 6HE-35	895,400	831,600	764,400	699,000	642,200	585,200	480,600	388,400	303,600
K*BP080M4S*	(2) 6GE-40	983,400	914,400	842,400	773,800	713,000	654,400	538,400	435,800	342,600
K*BP100M4S*	(2) 6FE-50	1,133,200	1,059,800	979,000	902,800	835,400	768,600	636,400	519,000	410,400
95°F Ambient										
K*BP050M4S*	(2) 4HE-25	558,400	518,600	477,000	436,400	400,600	365,400	300,600	243,200	189,000
K*BP060M4S*	(2) 4GE-30	649,200	603,200	553,000	507,600	466,600	426,000	350,200	281,800	220,800
K*BP070M4S*	(2) 6HE-35	848,400	786,000	722,400	659,200	604,200	553,400	451,000	362,200	281,400
K*BP080M4S*	(2) 6GE-40	928,000	864,000	793,800	727,600	670,400	613,200	504,800	409,000	320,000
K*BP100M4S*	(2) 6FE-50	1,079,800	1,008,400	931,800	858,200	792,400	726,400	603,200	490,400	387,000
100°F Ambient										
K*BP050M4S*	(2) 4HE-25	–	493,400	452,600	413,600	380,000	346,200	285,000	228,000	177,400
K*BP060M4S*	(2) 4GE-30	–	573,800	525,800	481,400	442,000	403,200	331,400	265,800	207,600
K*BP070M4S*	(2) 6HE-35	–	749,000	686,400	626,000	573,600	521,400	426,600	340,800	264,400
K*BP080M4S*	(2) 6GE-40	–	820,400	755,000	690,200	635,600	580,400	477,000	384,200	301,200
K*BP100M4S*	(2) 6FE-50	–	957,800	883,600	813,200	749,600	687,200	570,600	462,000	363,600
110°F Ambient										
K*BP050M4S*	(2) 4HE-25	–	–	405,000	371,400	339,400	306,200	251,400	200,400	153,800
K*BP060M4S*	(2) 4GE-30	–	–	470,000	430,600	394,600	357,600	294,400	234,800	182,200
K*BP070M4S*	(2) 6HE-35	–	–	616,400	561,000	513,800	465,600	377,600	299,200	229,600
K*BP080M4S*	(2) 6GE-40	–	–	674,200	616,800	565,800	515,400	422,400	337,600	261,800
K*BP100M4S*	(2) 6FE-50	–	–	790,200	725,400	667,600	610,800	503,800	406,000	316,400

Capacity Data (BTUH) - Med. Temp. R407A, R407F Bitzer - Parallel Compressor - 60 Hz‡

SUCTION TEMPERATURE

MODEL	COMP. MODEL	45	40	35	30	25	20	10	0	-10
90°F Ambient										
K*BP050M4S*	(2) 4HE-25	559,000	510,200	462,600	422,200	384,800	349,800	279,000	216,200	161,000
K*BP060M4S*	(2) 4GE-30	649,800	594,200	539,600	493,600	443,000	407,800	329,400	257,400	194,800
K*BP070M4S*	(2) 6HE-35	857,200	781,400	709,400	647,800	589,000	533,200	429,600	333,400	253,000
K*BP080M4S*	(2) 6GE-40	961,200	878,600	797,400	730,600	666,200	603,800	488,600	381,600	290,200
K*BP100M4S*	(2) 6FE-50	1,114,200	1,020,800	929,600	852,400	779,600	706,600	573,200	450,600	342,600
95°F Ambient										
K*BP050M4S*	(2) 4HE-25	537,200	485,000	443,400	405,000	367,400	334,000	265,200	204,400	152,000
K*BP060M4S*	(2) 4GE-30	625,000	565,800	518,400	471,600	431,000	392,800	315,400	244,200	182,600
K*BP070M4S*	(2) 6HE-35	822,600	750,200	679,600	620,400	563,400	513,000	410,200	317,000	237,400
K*BP080M4S*	(2) 6GE-40	922,800	843,200	766,200	699,600	638,200	577,800	467,400	362,200	273,600
K*BP100M4S*	(2) 6FE-50	1,071,000	980,800	892,000	817,000	746,400	680,400	546,600	427,000	324,000
100°F Ambient										
K*BP050M4S*	(2) 4HE-25	–	464,800	424,800	385,800	350,600	318,000	252,200	192,600	142,200
K*BP060M4S*	(2) 4GE-30	–	543,000	497,000	452,800	412,800	375,000	300,000	231,400	173,600
K*BP070M4S*	(2) 6HE-35	–	713,600	646,200	589,000	534,000	484,800	385,600	296,000	220,400
K*BP080M4S*	(2) 6GE-40	–	810,000	733,600	670,200	609,600	550,400	443,800	342,800	257,200
K*BP100M4S*	(2) 6FE-50	–	947,800	862,400	789,000	720,200	655,800	529,000	409,000	309,800
110°F Ambient										
K*BP050M4S*	(2) 4HE-25	–	–	386,600	351,000	317,800	287,000	224,200	169,600	123,400
K*BP060M4S*	(2) 4GE-30	–	–	454,000	413,200	375,200	340,000	268,200	205,800	152,000
K*BP070M4S*	(2) 6HE-35	–	–	596,000	540,800	490,400	443,000	351,800	265,800	196,800
K*BP080M4S*	(2) 6GE-40	–	–	670,800	610,400	555,600	502,800	397,200	304,600	226,400
K*BP100M4S*	(2) 6FE-50	–	–	781,400	711,600	648,400	588,200	467,600	358,800	267,800

See notes on page 11.

Capacity Data (BTUH) - Med. Temp. R407C Bitzer - Parallel Compressor - 60 Hz‡

SUCTION TEMPERATURE

MODEL	COMP. MODEL	45	40	35	30	25	20	10	0	-10
90°F Ambient										
K*BP050M4S*	(2) 4HE-25	546,800	503,600	453,400	413,200	376,600	341,600	272,000	209,400	153,800
K*BP060M4S*	(2) 4GE-30	648,800	598,200	537,800	493,600	441,800	405,400	326,800	254,000	191,600
K*BP070M4S*	(2) 6HE-35	814,200	737,000	671,000	610,600	556,200	501,200	402,400	311,600	237,400
K*BP080M4S*	(2) 6GE-40	933,400	845,800	773,800	711,000	647,000	586,400	474,400	374,000	287,600
K*BP100M4S*	(2) 6FE-50	1,076,200	981,800	894,600	819,400	746,400	672,200	551,200	430,400	327,000
95°F Ambient										
K*BP050M4S*	(2) 4HE-25	525,400	478,800	434,600	396,400	359,600	326,200	258,600	198,000	145,200
K*BP060M4S*	(2) 4GE-30	624,000	569,600	516,600	471,600	429,800	390,400	313,000	241,000	179,600
K*BP070M4S*	(2) 6HE-35	781,400	707,600	642,800	584,800	532,000	482,200	384,200	296,200	222,800
K*BP080M4S*	(2) 6GE-40	896,200	811,800	743,600	680,800	619,800	561,200	453,800	355,000	271,200
K*BP100M4S*	(2) 6FE-50	1,034,400	943,400	858,400	785,400	714,600	647,200	525,600	407,800	309,200
100°F Ambient										
K*BP050M4S*	(2) 4HE-25	–	458,800	416,400	377,600	343,200	310,600	246,000	186,600	135,800
K*BP060M4S*	(2) 4GE-30	–	546,600	495,200	452,800	411,600	372,800	297,800	228,400	170,800
K*BP070M4S*	(2) 6HE-35	–	673,000	611,200	555,200	504,200	455,600	361,200	276,600	206,800
K*BP080M4S*	(2) 6GE-40	–	779,800	712,000	652,200	592,000	534,600	430,800	336,000	255,000
K*BP100M4S*	(2) 6FE-50	–	911,600	830,000	758,400	689,600	623,800	508,600	390,600	295,600
110°F Ambient										
K*BP050M4S*	(2) 4HE-25	–	–	379,000	343,600	311,000	280,200	218,600	164,200	117,800
K*BP060M4S*	(2) 4GE-30	–	–	452,400	413,200	374,200	338,000	266,200	203,200	149,600
K*BP070M4S*	(2) 6HE-35	–	–	563,800	509,800	463,000	416,400	329,600	248,400	184,600
K*BP080M4S*	(2) 6GE-40	–	–	651,000	594,000	539,600	488,400	385,600	298,600	224,400
K*BP100M4S*	(2) 6FE-50	–	–	752,000	684,000	620,800	559,400	449,600	342,600	255,600

Capacity Data (BTUH) - Med. Temp. R448A, R449A/B Bitzer - Parallel Compressor - 60 Hz‡

SUCTION TEMPERATURE

MODEL	COMP. MODEL	45	40	35	30	25	20	10	0	-10
90°F Ambient										
K*BP050M4S*	(2) 4HE-25	570,200	528,200	477,800	437,200	401,800	366,400	298,800	236,200	182,000
K*BP060M4S*	(2) 4GE-30	659,200	610,600	552,000	509,600	457,600	422,200	345,200	274,800	215,000
K*BP070M4S*	(2) 6HE-35	862,600	787,800	719,600	658,800	601,200	544,600	444,000	350,200	272,600
K*BP080M4S*	(2) 6GE-40	953,200	874,800	796,800	737,000	673,800	613,800	503,000	401,200	314,600
K*BP100M4S*	(2) 6FE-50	1,114,200	1,027,000	940,600	870,200	801,200	731,200	605,000	484,600	377,800
95°F Ambient										
K*BP050M4S*	(2) 4HE-25	548,000	502,200	458,000	419,400	383,600	349,800	284,000	223,400	171,800
K*BP060M4S*	(2) 4GE-30	634,000	581,400	530,400	486,800	445,200	406,600	330,600	260,800	201,600
K*BP070M4S*	(2) 6HE-35	827,800	756,400	689,400	631,000	575,000	524,000	424,000	333,000	255,800
K*BP080M4S*	(2) 6GE-40	915,200	839,600	765,600	705,800	645,400	587,400	481,200	380,800	296,600
K*BP100M4S*	(2) 6FE-50	1,071,000	986,800	902,600	834,000	767,000	704,000	577,000	459,200	357,200
100°F Ambient										
K*BP050M4S*	(2) 4HE-25	–	481,200	438,800	399,600	366,000	333,000	270,000	210,600	160,800
K*BP060M4S*	(2) 4GE-30	–	558,000	508,600	467,400	426,400	388,200	314,400	247,200	191,600
K*BP070M4S*	(2) 6HE-35	–	719,400	655,600	599,000	545,000	495,200	398,600	311,000	237,400
K*BP080M4S*	(2) 6GE-40	–	806,600	733,000	676,200	616,400	559,600	457,000	360,400	278,800
K*BP100M4S*	(2) 6FE-50	–	953,600	872,600	805,400	740,000	678,600	558,400	439,800	341,600
110°F Ambient										
K*BP050M4S*	(2) 4HE-25	–	–	399,400	363,400	331,800	300,600	240,000	185,400	139,400
K*BP060M4S*	(2) 4GE-30	–	–	464,600	426,600	387,600	352,000	281,200	219,800	167,800
K*BP070M4S*	(2) 6HE-35	–	–	604,600	550,000	500,400	452,400	363,600	279,200	212,000
K*BP080M4S*	(2) 6GE-40	–	–	670,200	615,800	561,800	511,200	409,000	320,200	245,400
K*BP100M4S*	(2) 6FE-50	–	–	790,600	726,400	666,200	608,600	493,600	385,800	295,200

See notes on page 11.

Capacity Data (BTUH) - Low Temp. R404A Bitzer - Single Compressor - 60 Hz‡

SUCTION TEMPERATURE

MODEL	COMP. MODEL	0	-5	-10	-15	-20	-25	-30	-35	-40
90°F Ambient										
K*BV022L4S*	4GE-23	135,500	123,600	110,600	99,100	88,400	77,400	67,400	59,000	50,900
K*BV027L4S*	6HE-28	173,600	157,700	140,700	125,800	111,800	97,400	84,400	73,200	63,000
K*BV030L4S*	6GE-34	203,100	185,200	166,500	149,400	133,300	117,700	103,100	90,600	78,900
K*BV040L4S*	6FE-44	239,800	219,200	196,700	175,700	157,600	138,600	121,100	105,600	91,600
95°F Ambient										
K*BV022L4S*	4GE-23	128,200	116,500	104,300	93,300	82,700	72,600	63,100	55,200	47,400
K*BV027L4S*	6HE-28	164,300	148,700	132,600	118,400	104,600	91,400	79,000	68,500	58,700
K*BV030L4S*	6GE-34	192,300	175,000	157,200	140,900	125,500	110,700	96,700	84,800	73,500
K*BV040L4S*	6FE-44	224,000	202,100	183,000	165,100	148,500	131,900	116,300	100,900	85,800
100°F Ambient										
K*BV022L4S*	4GE-23	120,900	109,800	98,000	87,500	77,800	67,800	58,800	51,300	43,700
K*BV027L4S*	6HE-28	154,900	140,000	124,700	111,100	98,400	85,300	73,700	63,600	54,100
K*BV030L4S*	6GE-34	181,500	165,100	147,900	132,400	117,700	103,500	90,300	79,000	68,300
K*BV040L4S*	6FE-44	212,300	192,100	172,200	154,400	139,500	123,300	107,900	93,400	78,000
110°F Ambient										
K*BV022L4S*	4GE-23	106,400	96,100	85,500	75,900	67,100	58,400	50,400	43,700	37,300
K*BV027L4S*	6HE-28	136,400	122,600	108,800	96,300	84,900	73,500	63,100	54,200	46,100
K*BV030L4S*	6GE-34	160,000	145,000	129,600	115,400	102,200	89,400	77,600	67,500	59,500
K*BV040L4S*	6FE-44	188,300	170,100	151,000	135,400	119,600	104,900	91,500	78,100	64,200

Capacity Data (BTUH) - Low Temp. R407A, R407F Bitzer - Single Compressor - 60 Hz‡

SUCTION TEMPERATURE

MODEL	COMP. MODEL	0	-5	-10	-15	-20	-25	-30	-35	-40
90°F Ambient										
K*BV022L4S*	4GE-23	122,300	109,500	96,100	83,200	73,100	61,800	51,600	43,000	34,300
K*BV027L4S*	6HE-28	148,000	132,400	116,000	100,200	87,500	73,600	60,900	49,400	40,000
K*BV030L4S*	6GE-34	165,600	148,500	130,600	113,200	99,300	84,300	69,500	58,000	46,400
K*BV040L4S*	6FE-44	212,800	189,900	166,700	145,400	126,100	106,300	88,200	74,700	61,700
95°F Ambient										
K*BV022L4S*	4GE-23	116,600	104,000	91,100	78,800	68,900	58,100	48,300	40,100	32,400
K*BV027L4S*	6HE-28	140,600	125,400	109,600	94,400	82,300	68,900	56,400	45,800	36,100
K*BV030L4S*	6GE-34	157,000	139,300	123,400	106,800	93,400	78,500	65,600	54,300	44,200
K*BV040L4S*	6FE-44	204,400	182,200	159,400	138,800	119,500	100,800	82,800	68,900	54,800
100°F Ambient										
K*BV022L4S*	4GE-23	110,400	98,600	86,300	74,500	64,900	54,600	45,100	36,900	29,300
K*BV027L4S*	6HE-28	133,200	118,400	103,200	88,800	77,000	64,100	52,600	41,700	32,300
K*BV030L4S*	6GE-34	149,200	133,200	116,400	100,400	87,500	73,200	60,100	49,400	38,400
K*BV040L4S*	6FE-44	194,200	172,600	150,500	129,600	112,100	94,300	77,600	63,000	49,300
110°F Ambient										
K*BV022L4S*	4GE-23	99,400	88,300	76,600	65,700	57,000	47,500	38,900	30,400	23,400
K*BV027L4S*	6HE-28	118,800	105,200	91,100	78,400	66,800	55,000	44,400	34,400	26,200
K*BV030L4S*	6GE-34	133,000	118,400	102,800	87,900	76,000	63,000	51,500	40,700	30,500
K*BV040L4S*	6FE-44	175,600	155,600	134,300	115,000	97,700	81,400	66,000	52,500	39,600

* Each asterisk represents a variable character based upon model and voltage ordered. See page 2 for nomenclature.
All capaciites are calculated at 65°F return gas temperature and dew point values.
Liquid injection required.
Head fan required.
‡ Multiply capacity by .83 when used with 50 Hz power.
Low temperature Bitzer compressors are not available for use with R407C.

Capacity Data (BTUH) - Low Temp. R448A, R449A/B Bitzer - Single Compressor - 60 Hz‡

SUCTION TEMPERATURE

MODEL	COMP. MODEL	0	-5	-10	-15	-20	-25	-30	-35	-40
90°F Ambient										
K*BV022L4S*	4GE-23	128,400	116,000	103,000	91,000	80,200	69,200	59,200	50,500	40,000
K*BV027L4S*	6HE-28	155,200	140,200	124,100	109,400	96,500	83,100	71,400	60,300	48,300
K*BV030L4S*	6GE-34	188,900	173,900	154,100	137,400	122,800	108,000	92,000	80,200	62,900
K*BV040L4S*	6FE-44	227,900	206,400	183,200	161,800	143,600	123,600	106,100	91,500	77,000
95°F Ambient										
K*BV022L4S*	4GE-23	122,400	110,200	97,600	86,200	75,600	65,100	55,400	47,100	37,800
K*BV027L4S*	6HE-28	147,400	132,800	117,300	103,100	90,800	77,800	66,100	55,900	43,600
K*BV030L4S*	6GE-34	179,100	163,100	145,600	129,600	115,500	100,600	86,800	75,100	59,900
K*BV040L4S*	6FE-44	218,900	198,000	175,200	154,500	136,100	117,200	99,600	84,400	68,400
100°F Ambient										
K*BV022L4S*	4GE-23	115,900	104,500	92,500	81,500	71,200	61,200	51,700	43,300	–
K*BV027L4S*	6HE-28	139,600	125,400	110,500	97,000	85,000	72,400	61,600	50,900	–
K*BV030L4S*	6GE-34	170,200	156,000	137,300	121,800	108,200	93,800	79,500	68,300	–
K*BV040L4S*	6FE-44	208,000	187,600	165,400	144,300	127,700	109,600	93,300	77,200	–
110°F Ambient										
K*BV022L4S*	4GE-23	104,300	93,600	82,100	71,900	62,500	53,200	44,600	35,700	–
K*BV027L4S*	6HE-28	124,500	111,400	97,500	85,600	73,700	62,100	52,000	42,000	–
K*BV030L4S*	6GE-34	151,700	138,600	121,300	106,700	94,000	80,700	68,100	56,300	–
K*BV040L4S*	6FE-44	188,100	169,100	147,600	128,000	111,300	94,600	79,400	64,300	–

See notes on page 14.

Capacity Data (BTUH) - Low Temp. R404A Bitzer - Dual / Parallel Comp. - 60 Hz‡

SUCTION TEMPERATURE

DUAL MODEL	PARALLEL MODEL	COMP. MODEL	0	-5	-10	-15	-20	-25	-30	-35	-40
90°F Ambient											
K*BD044L4S*	K*BP044L4S*	(2) 4GE-23	271,000	247,200	221,200	198,200	176,800	154,800	134,800	118,000	101,800
K*BD054L4S*	K*BP054L4S*	(2) 6HE-28	347,200	315,400	281,400	251,600	223,600	194,800	168,800	146,400	126,000
K*BD060L4S*	K*BP060L4S*	(2) 6GE-34	406,200	370,400	333,000	298,800	266,600	235,400	206,200	181,200	157,800
K*BD080L4S*	K*BP080L4S*	(2) 6FE-44	479,600	438,400	393,400	351,400	315,200	277,200	242,200	211,200	183,200
95°F Ambient											
K*BD044L4S*	K*BP044L4S*	(2) 4GE-23	256,400	233,000	208,600	186,600	165,400	145,200	126,200	110,400	94,800
K*BD054L4S*	K*BP054L4S*	(2) 6HE-28	328,600	297,400	265,200	236,800	209,200	182,800	158,000	137,000	117,400
K*BD060L4S*	K*BP060L4S*	(2) 6GE-34	384,600	350,000	314,400	281,800	251,000	221,400	193,400	169,600	147,000
K*BD080L4S*	K*BP080L4S*	(2) 6FE-44	448,000	404,200	366,000	330,200	297,000	263,800	232,600	201,800	171,600
100°F Ambient											
K*BD044L4S*	K*BP044L4S*	(2) 4GE-23	241,800	219,600	196,000	175,000	155,600	135,600	117,600	102,600	87,400
K*BD054L4S*	K*BP054L4S*	(2) 6HE-28	309,800	280,000	249,400	222,200	196,800	170,600	147,400	127,200	108,200
K*BD060L4S*	K*BP060L4S*	(2) 6GE-34	363,000	330,200	295,800	264,800	235,400	207,000	180,600	158,000	136,600
K*BD080L4S*	K*BP080L4S*	(2) 6FE-44	424,600	384,200	344,400	308,800	279,000	246,600	215,800	186,800	156,000
110°F Ambient											
K*BD044L4S*	K*BP044L4S*	(2) 4GE-23	212,800	192,200	171,000	151,800	134,200	116,800	100,800	87,400	74,600
K*BD054L4S*	K*BP054L4S*	(2) 6HE-28	272,800	245,200	217,600	192,600	169,800	147,000	126,200	108,400	92,200
K*BD060L4S*	K*BP060L4S*	(2) 6GE-34	320,000	290,000	259,200	230,800	204,400	178,800	155,200	135,000	119,000
K*BD080L4S*	K*BP080L4S*	(2) 6FE-44	376,600	340,200	302,000	270,800	239,200	209,800	183,000	156,200	128,400

* Each asterisk represents a variable character based upon model and voltage ordered. See page 2 for nomenclature.
All capaciites are calculated at 65°F return gas temperature and dew point values.
Head fan required.
‡ Multiply capacity by .83 when used with 50 Hz power.

Capacity Data (BTUH) - Low Temp. R407A, R407F Bitzer - Dual / Parallel Comp. - 60 Hz‡

SUCTION TEMPERATURE

DUAL MODEL	PARALLEL MODEL	COMP. MODEL	0	-5	-10	-15	-20	-25	-30	-35	-40
90°F Ambient											
K*BD044L4S*	K*BP044L4S*	(2) 4GE-23	244,600	219,000	192,200	166,400	146,200	123,600	103,200	86,000	68,600
K*BD054L4S*	K*BP054L4S*	(2) 6HE-28	296,000	264,800	232,000	200,400	175,000	147,200	121,800	98,800	80,000
K*BD060L4S*	K*BP060L4S*	(2) 6GE-34	331,200	297,000	261,200	226,400	198,600	168,600	139,000	116,000	92,800
K*BD080L4S*	K*BP080L4S*	(2) 6FE-44	425,600	379,800	333,400	290,800	252,200	212,600	176,400	149,400	123,400
95°F Ambient											
K*BD044L4S*	K*BP044L4S*	(2) 4GE-23	233,200	208,000	182,200	157,600	137,800	116,200	96,600	80,200	64,800
K*BD054L4S*	K*BP054L4S*	(2) 6HE-28	281,200	250,800	219,200	188,800	164,600	137,800	112,800	91,600	72,200
K*BD060L4S*	K*BP060L4S*	(2) 6GE-34	314,000	278,600	246,800	213,600	186,800	157,000	131,200	108,600	88,400
K*BD080L4S*	K*BP080L4S*	(2) 6FE-44	408,800	364,400	318,800	277,600	239,000	201,600	165,600	137,800	109,600
100°F Ambient											
K*BD044L4S*	K*BP044L4S*	(2) 4GE-23	220,800	197,200	172,600	149,000	129,800	109,200	90,200	73,800	58,600
K*BD054L4S*	K*BP054L4S*	(2) 6HE-28	266,400	236,800	206,400	177,600	154,000	128,200	105,200	83,400	64,600
K*BD060L4S*	K*BP060L4S*	(2) 6GE-34	298,400	266,400	232,800	200,800	175,000	146,400	120,200	98,800	76,800
K*BD080L4S*	K*BP080L4S*	(2) 6FE-44	388,400	345,200	301,000	259,200	224,200	188,600	155,200	126,000	98,600
110°F Ambient											
K*BD044L4S*	K*BP044L4S*	(2) 4GE-23	198,800	176,600	153,200	131,400	114,000	95,000	77,800	60,800	46,800
K*BD054L4S*	K*BP054L4S*	(2) 6HE-28	237,600	210,400	182,200	156,800	133,600	110,000	88,800	68,800	52,400
K*BD060L4S*	K*BP060L4S*	(2) 6GE-34	266,000	236,800	205,600	175,800	152,000	126,000	103,000	81,400	61,000
K*BD080L4S*	K*BP080L4S*	(2) 6FE-44	351,200	311,200	268,600	230,000	195,400	162,800	132,000	105,000	79,200

Capacity Data (BTUH) - Low Temp. R448A, R449A/B Bitzer - Dual / Parallel Comp. - 60 Hz‡

SUCTION TEMPERATURE

DUAL MODEL	PARALLEL MODEL	COMP. MODEL	0	-5	-10	-15	-20	-25	-30	-35	-40
90°F Ambient											
K*BD044L4S*	K*BP044L4S*	(2) 4GE-23	256,800	232,000	206,000	182,000	160,400	138,400	118,400	101,000	80,000
K*BD054L4S*	K*BP054L4S*	(2) 6HE-28	310,400	280,400	248,200	218,800	193,000	166,200	142,800	120,600	96,600
K*BD060L4S*	K*BP060L4S*	(2) 6GE-34	377,800	347,800	308,200	274,800	245,600	216,000	184,000	160,400	125,800
K*BD080L4S*	K*BP080L4S*	(2) 6FE-44	455,800	412,800	366,400	323,600	287,200	247,200	212,200	183,000	154,000
95°F Ambient											
K*BD044L4S*	K*BP044L4S*	(2) 4GE-23	244,800	220,400	195,200	172,400	151,200	130,200	110,800	94,200	75,600
K*BD054L4S*	K*BP054L4S*	(2) 6HE-28	294,800	265,600	234,600	206,200	181,600	155,600	132,200	111,800	87,200
K*BD060L4S*	K*BP060L4S*	(2) 6GE-34	358,200	326,200	291,200	259,200	231,000	201,200	173,600	150,200	119,800
K*BD080L4S*	K*BP080L4S*	(2) 6FE-44	437,800	396,000	350,400	309,000	272,200	234,400	199,200	168,800	136,800
100°F Ambient											
K*BD044L4S*	K*BP044L4S*	(2) 4GE-23	231,800	209,000	185,000	163,000	142,400	122,400	103,400	86,600	–
K*BD054L4S*	K*BP054L4S*	(2) 6HE-28	279,200	250,800	221,000	194,000	170,000	144,800	123,200	101,800	–
K*BD060L4S*	K*BP060L4S*	(2) 6GE-34	340,400	312,000	274,600	243,600	216,400	187,600	159,000	136,600	–
K*BD080L4S*	K*BP080L4S*	(2) 6FE-44	416,000	375,200	330,800	288,600	255,400	219,200	186,600	154,400	–
110°F Ambient											
K*BD044L4S*	K*BP044L4S*	(2) 4GE-23	208,600	187,200	164,200	143,800	125,000	106,400	89,200	71,400	–
K*BD054L4S*	K*BP054L4S*	(2) 6HE-28	249,000	222,800	195,000	171,200	147,400	124,200	104,000	84,000	–
K*BD060L4S*	K*BP060L4S*	(2) 6GE-34	303,400	277,200	242,600	213,400	188,000	161,400	136,200	112,600	–
K*BD080L4S*	K*BP080L4S*	(2) 6FE-44	376,200	338,200	295,200	256,000	222,600	189,200	158,800	128,600	–

* Each asterisk represents a variable character based upon model and voltage ordered. See page 2 for nomenclature.
All capaciites are calculated at 65°F return gas temperature and dew point values.
Liquid injection required.
Head fan required.
‡ Multiply capacity by .83 when used with 50 Hz power.
Low temperature Bitzer compressors are not available for use with R407C.

Highlighted Features

Hinged fan panels for easy serviceability

Gas filled struts hold fan panels securely in upright position

Service convenience outlet

Thru-the-door disconnect switch available as an option

Floored and lighted compressor cabinet with removable compressor tray

Mechanically formed pre-bent tubing reduces potential leaks

Service gauge hooks

Hinged and removable access panels

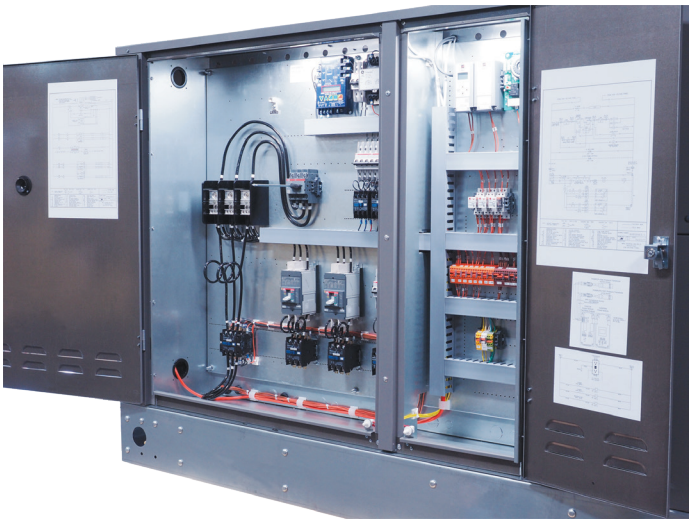

Hinged and removable lighted control panels

Easy to read control wiring diagram with diagnostic terminals

Separate high and low voltage control panels

Electrical Specifications - Bitzer - Single Compressor Models

BASE MODEL	COMPRESSOR MODEL	COMPRESSOR			COND. FAN		CONTROL AMPS	AIR DEFROST/REMOTE	
		RLA	MCC	LRA^	TOTAL FAN FLA	QTY.		MCA	MOPD
208-230V/3/60 Hz									
K*BV015M4S*	4NE-20	57.7	90.0	352.0	13.0	2	2.0	87.1	125
K*BV020M4S*	4JE-22	61.5	95.9	352.0	13.0	2	2.0	91.9	150
K*BV025M4S*	4HE-25	75.6	117.9	436.0	13.0	2	2.0	109.5	175
K*BV030M4S*	4GE-30	89.7	139.9	294.0	13.0	2	2.0	127.1	200
K*BV035M4S*	6HE-35	105.1	164.0	330.0	19.5	3	2.0	152.9	250
K*BV040M4S*	6GE-40	141.0	220.0	420.0	19.5	3	2.0	197.8	300
K*BV050M4S*	6FE-50	143.6	224.0	570.0	19.5	3	2.0	201.0	300
K*BV022L4S*	4GE-23	57.7	90.0	352.0	13.0	2	2.0	87.1	125
K*BV027L4S*	6HE-28	77.6	121.1	490.0	13.0	2	2.0	112.0	175
K*BV030L4S*	6GE-34	84.6	132.0	294.0	13.0	2	2.0	120.8	200
K*BV040L4S*	6FE-44	97.4	151.9	420.0	13.0	2	2.0	136.8	225
460V/3/60 Hz									
K*BV015M4S*	4NE-20	28.8	44.9	176.0	6.6	2	1.0	43.6	70
K*BV020M4S*	4JE-22	30.8	48.0	176.0	6.6	2	1.0	46.1	70
K*BV025M4S*	4HE-25	37.8	59.0	218.0	6.6	2	1.0	54.9	90
K*BV030M4S*	4GE-30	44.9	70.0	245.0	6.6	2	1.0	63.7	100
K*BV035M4S*	6HE-35	52.6	82.1	275.0	9.9	3	1.0	76.7	125
K*BV040M4S*	6GE-40	70.5	110.0	350.0	9.9	3	1.0	99.0	150
K*BV050M4S*	6FE-50	71.8	112.0	425.0	9.9	3	1.0	100.7	150
K*BV022L4S*	4GE-23	28.8	44.9	176.0	6.6	2	1.0	43.6	70
K*BV027L4S*	6HE-28	38.8	60.5	245.0	6.6	2	1.0	56.1	90
K*BV030L4S*	6GE-34	42.3	66.0	245.0	6.6	2	1.0	60.5	100
K*BV040L4S*	6FE-44	48.7	76.0	350.0	6.6	2	1.0	68.5	110

* Each asterisk represents a variable character based upon model and voltage ordered. See page 2 for nomenclature.
^ Model utilizes part winding start.

Electrical Specifications - Bitzer - Single Compressor Models Cont.

BASE MODEL	4 CONTACTOR DEFROST KIT					2 CONTACTOR DEFROST KIT					1 CONTACTOR DEFROST KIT				
	KIT NAME	FAN AMPS	HEATER AMPS	MCA	MOPD	KIT NAME	FAN AMPS	HEATER AMPS	MCA	MOPD	KIT NAME	FAN AMPS	HEATER AMPS	MCA	MOPD
208-230V/3/60 Hz															
K*BV015M4S*	DLD96	24.0	96.0	122.0	150	DLB96	24.0	96.0	122.0	150	DLA48	15.0	48.0	102.1	150
K*BV020M4S*	DLD96	24.0	96.0	122.0	175	DLB96	24.0	96.0	122.0	175	DLA48	15.0	48.0	106.9	150
K*BV025M4S*	DLD192	24.0	192.0	242.0	250	DLB96	24.0	96.0	133.5	200	DLA48	15.0	48.0	124.5	200
K*BV030M4S*	DLD192	24.0	192.0	242.0	250	DLB96	24.0	96.0	151.1	225	DLA48	15.0	48.0	142.1	225
K*BV035M4S*	DLD192	24.0	192.0	242.0	250	DLB96	24.0	96.0	176.9	250	DLA48	15.0	48.0	167.9	250
K*BV040M4S*	DLD192	24.0	192.0	242.0	350	DLB96	24.0	96.0	221.8	350	DLA48	15.0	48.0	212.8	350
K*BV050M4S*	DLD192	24.0	192.0	242.0	350	DLB96	24.0	96.0	225.0	350	DLA48	15.0	48.0	216.0	350
K*BV022L4S*	DLD96	24.0	96.0	122.0	150	DLB96	24.0	96.0	122.0	150	DLA48	15.0	48.0	102.1	150
K*BV027L4S*	DLD96	24.0	96.0	136.0	200	DLB96	24.0	96.0	136.0	200	DLA48	15.0	48.0	127.0	200
K*BV030L4S*	DLD144	24.0	144.0	182.0	225	DLB96	24.0	96.0	144.8	225	DLA48	15.0	48.0	135.8	200
K*BV040L4S*	DLD144	24.0	144.0	182.0	250	DLB96	24.0	96.0	160.8	250	DLA48	15.0	48.0	151.8	225
460V/3/60 Hz															
K*BV015M4S*	DLD60	24.0	60.0	76.0	90	DLB48	15.0	48.0	61.0	80	DLA24	15.0	24.0	58.6	80
K*BV020M4S*	DLD60	24.0	60.0	76.0	100	DLB48	15.0	48.0	61.1	90	DLA48	15.0	48.0	61.1	90
K*BV025M4S*	DLD96	24.0	96.0	121.0	125	DLB48	15.0	48.0	69.9	100	DLA48	15.0	48.0	69.9	100
K*BV030M4S*	DLD96	24.0	96.0	121.0	125	DLB48	15.0	48.0	78.7	110	DLA48	15.0	48.0	78.7	110
K*BV035M4S*	DLD96	24.0	96.0	121.0	150	DLB48	15.0	48.0	91.7	125	DLA48	15.0	48.0	91.7	125
K*BV040M4S*	DLD96	24.0	96.0	123.0	175	DLB48	15.0	48.0	114.0	175	DLA48	15.0	48.0	114.0	175
K*BV050M4S*	DLD96	24.0	96.0	124.7	175	DLB48	15.0	48.0	115.7	175	DLA48	15.0	48.0	115.7	175
K*BV022L4S*	DLD60	24.0	60.0	76.0	90	DLB48	15.0	48.0	61.0	80	DLA48	15.0	48.0	61.0	80
K*BV027L4S*	DLD60	24.0	60.0	80.1	110	DLB48	15.0	48.0	71.1	100	DLA48	15.0	48.0	71.1	100
K*BV030L4S*	DLD96	24.0	96.0	121.0	125	DLB48	15.0	48.0	75.5	110	DLA48	15.0	48.0	75.5	110
K*BV040L4S*	DLD96	24.0	96.0	121.0	125	DLB48	15.0	48.0	83.5	125	DLA48	15.0	48.0	83.5	125

* Each asterisk represents a variable character based upon model and voltage ordered. See page 2 for nomenclature.

Application: Food Processing and Warehousing

Electrical Specifications - Bitzer - Dual Compressor Models

BASE MODEL	COMPRESSOR MODEL	COMPRESSOR			COND. FAN		CONTROL AMPS	AIR DEFROST/REMOTE	
		RLA	MCC	LRA^	TOTAL FAN FLA	QTY.		MCA	MOPD
208-230V/3/60 Hz									
K*BD030M4S*	(2) 4NE-20	57.7	90.0	352.0	26.0	4	2.0	157.8	200
K*BD040M4S*	(2) 4JE-22	61.5	95.9	352.0	26.0	4	2.0	166.4	225
K*BD050M4S*	(2) 4HE-25	75.6	117.9	436.0	26.0	4	2.0	198.1	250
K*BD060M4S*	(2) 4GE-30	89.7	139.9	294.0	26.0	4	2.0	229.8	300
K*BD070M4S*	(2) 6HE-35	105.1	164.0	330.0	39.0	6	2.0	277.5	350
K*BD080M4S*	(2) 6GE-40	141.0	220.0	420.0	39.0	6	2.0	358.3	450
K*BD100M4S*	(2) 6FE-50	143.6	224.0	570.0	39.0	6	2.0	364.1	500
K*BD044L4S*	(2) 4GE-23	57.7	90.0	352.0	13.0	2	2.0	144.8	200
K*BD054L4S*	(2) 6HE-28	77.6	121.1	490.0	13.0	2	2.0	189.6	250
K*BD060L4S*	(2) 6GE-34	84.6	132.0	294.0	13.0	2	2.0	205.4	250
K*BD080L4S*	(2) 6FE-44	97.4	151.9	420.0	13.0	2	2.0	234.2	300
460V/3/60 Hz									
K*BD030M4S*	(2) 4NE-20	28.8	44.9	176.0	13.2	4	1.0	79.0	100
K*BD040M4S*	(2) 4JE-22	30.8	48.0	176.0	13.2	4	1.0	83.5	110
K*BD050M4S*	(2) 4HE-25	37.8	59.0	218.0	13.2	4	1.0	99.3	125
K*BD060M4S*	(2) 4GE-30	44.9	70.0	245.0	13.2	4	1.0	115.2	150
K*BD070M4S*	(2) 6HE-35	52.6	82.1	275.0	19.8	6	1.0	139.2	175
K*BD080M4S*	(2) 6GE-40	70.5	110.0	350.0	19.8	6	1.0	179.4	225
K*BD100M4S*	(2) 6FE-50	71.8	112.0	425.0	19.8	6	1.0	162.6	225
K*BD044L4S*	(2) 4GE-23	28.8	44.9	176.0	13.2	4	1.0	79.0	100
K*BD054L4S*	(2) 6HE-28	38.8	60.5	245.0	13.2	4	1.0	101.5	125
K*BD060L4S*	(2) 6GE-34	42.3	66.0	245.0	13.2	4	1.0	109.4	150
K*BD080L4S*	(2) 6FE-44	48.7	76.0	350.0	13.2	4	1.0	123.8	150

* Each asterisk represents a variable character based upon model and voltage ordered. See page 2 for nomenclature.
^ Model utilizes part winding start.

Electrical Specifications - Bitzer - Dual Compressor Models Cont.

BASE MODEL	2 CONTACTOR DEFROST KIT							1 CONTACTOR DEFROST KIT						
	KIT NAME	KIT FAN AMPS	KIT HEAT AMPS	FAN AMPS	TOTAL HEATER AMPS	MCA	MOPD	KIT NAME	KIT FAN AMPS	KIT HEAT AMPS	FAN AMPS	TOTAL HEATER AMPS	MCA	MOPD
208-230V/3/60 Hz														
K*BD030M4S*	DLD96	24.0	96.0	48.0	192.0	242.0	250	DLB96	24.0	96.0	48.0	192.0	242.0	250
K*BD040M4S*	DLD96	24.0	96.0	48.0	192.0	242.0	250	DLB96	24.0	96.0	48.0	192.0	242.0	250
K*BD050M4S*	DLD192	24.0	192.0	48.0	384.0	482.0	500	DLB96	24.0	96.0	48.0	192.0	253.5	300
K*BD060M4S*	DLD192	24.0	192.0	48.0	384.0	482.0	500	DLB96	24.0	96.0	48.0	192.0	277.8	350
K*BD070M4S*	DLD192	24.0	192.0	48.0	384.0	482.0	500	DLB96	24.0	96.0	48.0	192.0	325.5	400
K*BD080M4S*	DLD192	24.0	192.0	48.0	384.0	482.0	500	DLB96	24.0	96.0	48.0	192.0	406.3	500
K*BD100M4S*	DLD192	24.0	192.0	48.0	384.0	482.0	500	DLB96	24.0	96.0	48.0	192.0	412.1	500
K*BD044L4S*	DLD96	24.0	96.0	48.0	192.0	242.0	250	DLB96	24.0	96.0	48.0	192.0	242.0	250
K*BD054L4S*	DLD96	24.0	96.0	48.0	192.0	249.5	300	DLB96	24.0	96.0	48.0	192.0	249.5	300
K*BD060L4S*	DLD144	24.0	144.0	48.0	288.0	362.0	400	DLB96	24.0	96.0	48.0	192.0	258.3	300
K*BD080L4S*	DLD144	24.0	144.0	48.0	288.0	362.0	400	DLB96	24.0	96.0	48.0	192.0	282.2	350
460V/3/60 Hz														
K*BD030M4S*	DLD60	24.0	60.0	48.0	120.0	151.0	175	DLB35	15.0	35.0	30.0	70.0	109.0	125
K*BD040M4S*	DLD60	24.0	60.0	48.0	120.0	151.0	175	DLB35	15.0	35.0	30.0	70.0	113.5	125
K*BD050M4S*	DLD60	24.0	60.0	48.0	120.0	153.9	175	DLB35	15.0	35.0	30.0	70.0	129.3	150
K*BD060M4S*	DLD60	24.0	60.0	48.0	120.0	163.2	200	DLB35	15.0	35.0	30.0	70.0	145.2	175
K*BD070M4S*	DLD60	24.0	60.0	48.0	120.0	187.2	225	DLB35	15.0	35.0	30.0	70.0	169.2	200
K*BD080M4S*	DLD60	24.0	60.0	48.0	120.0	227.4	250	DLB35	15.0	35.0	30.0	70.0	209.4	250
K*BD100M4S*	DLD60	24.0	60.0	48.0	120.0	210.6	250	DLB35	15.0	35.0	30.0	70.0	192.6	250
K*BD044L4S*	DLD60	24.0	60.0	48.0	120.0	151.0	175	DLB35	15.0	35.0	30.0	70.0	109.0	125
K*BD054L4S*	DLD60	24.0	60.0	48.0	120.0	155.1	175	DLB35	15.0	35.0	30.0	70.0	131.5	150
K*BD060L4S*	DLD60	24.0	60.0	48.0	120.0	159.5	175	DLB35	15.0	35.0	30.0	70.0	139.4	175
K*BD080L4S*	DLD60	24.0	60.0	48.0	120.0	171.8	200	DLB35	15.0	35.0	30.0	70.0	153.8	200

* Each asterisk represents a variable character based upon model and voltage ordered. See page 2 for nomenclature.

Application: Commercial Warehouse Cooling

Electrical Specifications - Bitzer - Parallel Compressor Models

BASE MODEL	COMPRESSOR MODEL	COMPRESSOR			COND. FAN		CONTROL AMPS	AIR DEFROST/REMOTE	
		RLA	MCC	LRA^	TOTAL FAN FLA	QTY.		MCA	MOPD
208-230V/3/60 Hz									
K*BP050M4S*	(2) 4HE-25	75.6	117.9	436.0	26.0	4	2.0	198.1	250
K*BP060M4S*	(2) 4GE-30	89.7	139.9	294.0	26.0	4	2.0	229.8	300
K*BP070M4S*	(2) 6HE-35	105.1	164.0	330.0	39.0	6	2.0	277.5	350
K*BP080M4S*	(2) 6GE-40	141.0	220.0	420.0	39.0	6	2.0	358.3	450
K*BP100M4S*	(2) 6FE-50	143.6	224.0	570.0	39.0	6	2.0	364.1	500
K*BP044L4S*	(2) 4GE-23	57.7	90.0	352.0	13.0	2	2.0	144.8	200
K*BP054L4S*	(2) 6HE-28	77.6	121.1	490.0	13.0	2	2.0	189.6	250
K*BP060L4S*	(2) 6GE-34	84.6	132.0	294.0	13.0	2	2.0	205.4	250
K*BP080L4S*	(2) 6FE-44	97.4	151.9	420.0	13.0	2	2.0	234.2	300
460V/3/60 Hz									
K*BP050M4S*	(2) 4HE-25	37.8	59.0	218.0	13.2	4	1.0	99.3	125
K*BP060M4S*	(2) 4GE-30	44.9	70.0	245.0	13.2	4	1.0	115.2	150
K*BP070M4S*	(2) 6HE-35	52.6	82.1	275.0	19.8	6	1.0	139.2	175
K*BP080M4S*	(2) 6GE-40	70.5	110.0	350.0	19.8	6	1.0	179.4	225
K*BP100M4S*	(2) 6FE-50	71.8	112.0	425.0	19.8	6	1.0	182.4	250
K*BP044L4S*	(2) 4GE-23	28.8	44.9	176.0	13.2	4	1.0	79.0	100
K*BP054L4S*	(2) 6HE-28	38.8	60.5	245.0	13.2	4	1.0	101.5	125
K*BP060L4S*	(2) 6GE-34	42.3	66.0	245.0	13.2	4	1.0	109.4	150
K*BP080L4S*	(2) 6FE-44	48.7	76.0	350.0	13.2	4	1.0	123.8	150

* Each asterisk represents a variable character based upon model and voltage ordered. See page 2 for nomenclature.
^ Model utilizes part winding start.

Electrical Specifications - Bitzer - Parallel Compressor Models Cont.

BASE MODEL	4 CONTACTOR DEFROST KIT					2 CONTACTOR DEFROST KIT				
	KIT NAME	FAN AMPS	HEATER AMPS	MCA	MOPD	KIT NAME	FAN AMPS	HEATER AMPS	MCA	MOPD
208-230V/3/60 Hz										
K*BP050M4S*	DLD192	24.0	192.0	242.0	250	DLB96	24.0	96.0	222.1	250
K*BP060M4S*	DLD192	24.0	192.0	253.8	300	DLB96	24.0	96.0	253.8	300
K*BP070M4S*	DLD192	24.0	192.0	301.5	400	DLB96	24.0	96.0	301.5	400
K*BP080M4S*	DLD192	24.0	192.0	382.3	500	DLB96	24.0	96.0	382.3	500
K*BP100M4S*	DLD192	24.0	192.0	388.1	500	DLB96	24.0	96.0	388.1	500
K*BP044L4S*	DLD96	24.0	96.0	168.8	225	DLB60	15.0	60.0	159.8	200
K*BP054L4S*	DLD96	24.0	96.0	213.6	250	DLB96	24.0	96.0	213.6	250
K*BP060L4S*	DLD144	24.0	144.0	229.4	300	DLB96	24.0	96.0	229.4	300
K*BP080L4S*	DLD144	24.0	144.0	258.2	350	DLB96	24.0	96.0	258.2	350
460V/3/60 Hz										
K*BP050M4S*	DLD96	24.0	96.0	123.3	150	DLB48	15.0	48.0	114.3	150
K*BP060M4S*	DLD96	24.0	96.0	139.2	175	DLB48	15.0	48.0	130.2	175
K*BP070M4S*	DLD96	24.0	96.0	163.2	200	DLB48	15.0	48.0	154.2	200
K*BP080M4S*	DLD96	24.0	96.0	203.4	250	DLB48	15.0	48.0	194.4	250
K*BP100M4S*	DLD96	24.0	96.0	206.4	250	DLB48	15.0	48.0	197.4	250
K*BP044L4S*	DLD60	24.0	60.0	103.0	125	DLB48	15.0	48.0	94.0	110
K*BP054L4S*	DLD60	24.0	60.0	125.5	150	DLB48	15.0	48.0	116.5	150
K*BP060L4S*	DLD60	24.0	60.0	133.4	175	DLB48	15.0	48.0	124.4	150
K*BP080L4S*	DLD60	24.0	60.0	147.8	175	DLB48	15.0	48.0	138.8	175

* Each asterisk represents a variable character based upon model and voltage ordered. See page 2 for nomenclature.

Application: Industrial Cooling

Defrost Kits- All Models

DEFROST KIT NOMENCLATURE

When selecting defrost kit, use the next higher amp value above the defrost load.

DL	HEATER CONTACTOR QTY.	MAX TOTAL HEATER AMP VALUE	SPECIAL KIT CODES
Defrost Kit Large Condenser	**A:** 1 Heater Contactor **B:** 2 Heater Contactors **C:** 3 Heater Contactors **D:** 4 Heater Contactors	30 = 30 amps total 48 = 48 amps total	PP = Pressure Prop Kits for Large Evaporators "-1" # of Evaps with Multiple Heater Feeds

All kits include 1 fan contactor and are suitable for 1 or 3 phase loads.
Electrical resistance loads greater than 48 amps must be split into multiple circuits.

Single and Parallel Compressor Kit Options

1 Contactor	2 Contactor	3 Contactor	4 Contactor
NONE TMR ONLY	DLB35 DLB40	DLC35 DLC40	DLD60 DLD96
DLA24 DLA30	DLB48 DLB60	DLC48 DLC60	DLD144 DLD144-2
DLA35 DLA40 DLA48	DLB60-1 DLB96 DLB96-1	DLC96 DLC144 DLC60PP	DLD192-2 DLD144-2 DLD192-2
DLA24PP DLA30PP DLA35PP	DLB35PP DLB40PP DLB48PP	DLC96PP DLC144PP	DLD144-2PP DLD192-2PP
DLA40PP DLA48PP	DLB60PP DLB60-1PP		
	DLB96PP DLB96-1PP		

Defrost Kit selected for Single and Parallel compressor models is for entire unit. Up to 4 contactors.

Dual Compressor Kit Options

1 Contactor	2 Contactor
NONE TMR ONLY	DLB35 DLB40
DLA24 DLA30 DLA35	DLB48 DLB60 DLB60-1
DLA40 DLA48	DLB96 DLB96-1
DLA24PP DLA30PP DLA35PP	DLB35PP DLB40PP DLB48PP
DLA40PP DLA48PP	DLB60PP DLB60-1PP
	DLB96PP DLB96-1PP

Defrost Kit selected is per compressor for Dual compressor models. Up to 2 contactors/compressor.

Specifications - All Models

MODEL DATA				CONNECTIONS (ODS)		RECEIVER CAPACITY BY REFRIGERANT					
						STANDARD RECEIVER					
						90% R404A (LBS.)		90% R407A, R407C, R407F (LBS.)		90% R448A, R449A, R449B (LBS.)	
MODEL NUMBER	COMP. MODEL	HP	COND. FAN QTY.	LIQUID	SUCTION^	KF FLOOD.	KB NON-FLOOD.	KF FLOOD.	KB NON-FLOOD.	KF FLOOD.	KB NON-FLOOD.
Single Compressor Models											
K*BV015M4S*	4NE-20	15	2	7/8	1-5/8	99	99	109	109	103	103
K*BV020M4S*	4JE-22	20	2	7/8	2-1/8	133	99	146	109	139	103
K*BV025M4S*	4HE-25	25	2	7/8	2-1/8	133	99	146	109	139	103
K*BV030M4S*	4GE-30	30	2	1-1/8	2-1/8	200	133	219	146	209	139
K*BV035M4S*	6HE-35	35	3	1-1/8	2-1/8	200	133	219	146	209	139
K*BV040M4S*	6GE-40	40	3	1-1/8	2-1/8	200	133	219	146	209	139
K*BV050M4S*	6FE-50	50	3	1-1/8	2-5/8	261	200	286	219	272	209
K*BV022L4S*	4GE-23	22	2	7/8	2-1/8	99	99	109	109	103	103
K*BV027L4S*	6HE-28	27	2	7/8	2-1/8	133	99	146	109	139	103
K*BV030L4S*	6GE-34	30	2	7/8	2-1/8	133	99	146	109	139	103
K*BV040L4S*	6FE-44	40	2	1-1/8	2-5/8	200	133	219	146	209	139
Dual Compressor Models											
K*BD030M4S*	(2) 4NE-20	30	4	(2) 7/8	(2) 1-5/8	(2) 99	(2) 99	(2) 109	(2) 109	(2) 103	(2) 103
K*BD040M4S*	(2) 4JE-22	40	4	(2) 7/8	(2) 2-1/8	(2) 133	(2) 99	(2) 146	(2) 109	(2) 139	(2) 103
K*BD050M4S*	(2) 4HE-25	50	4	(2) 7/8	(2) 2-1/8	(2) 133	(2) 99	(2) 146	(2) 109	(2) 139	(2) 103
K*BD060M4S*	(2) 4GE-30	60	4	(2) 1-1/8	(2) 2-1/8	(2) 200	(2) 133	(2) 219	(2) 146	(2) 209	(2) 139
K*BD070M4S*	(2) 6HE-35	70	6	(2) 1-1/8	(2) 2-1/8	(2) 200	(2) 133	(2) 219	(2) 146	(2) 209	(2) 139
K*BD080M4S*	(2) 6GE-40	80	6	(2) 1-1/8	(2) 2-1/8	(2) 200	(2) 133	(2) 219	(2) 146	(2) 209	(2) 139
K*BD100M4S*	(2) 6FE-50	100	6	(2) 1-1/8	(2) 2-5/8	(2) 261	(2) 200	(2) 286	(2) 219	(2) 272	(2) 209
K*BD044L4S*	(2) 4GE-23	44	4	(2) 7/8	(2) 2-1/8	(2) 99	(2) 99	(2) 109	(2) 109	(2) 103	(2) 103
K*BD054L4S*	(2) 6HE-28	54	4	(2) 7/8	(2) 2-1/8	(2) 133	(2) 99	(2) 146	(2) 109	(2) 139	(2) 103
K*BD060L4S*	(2) 6GE-34	60	4	(2) 7/8	(2) 2-1/8	(2) 133	(2) 99	(2) 146	(2) 109	(2) 139	(2) 103
K*BD080L4S*	(2) 6FE-44	80	4	(2) 1-1/8	(2) 2-5/8	(2) 200	(2) 133	(2) 219	(2) 146	(2) 209	(2) 139
Parallel Compressor Models											
K*BP050M4S*	(2) 4HE-25	50	4	1-1/8	2 5/8	261	200	219	219	272	209
K*BP060M4S*	(2) 4GE-30	60	4	1-3/8	2 5/8	261	200	219	219	272	209
K*BP070M4S*	(2) 6HE-35	70	6	1-3/8	3 1/8	373	261	286	286	389	272
K*BP080M4S*	(2) 6GE-40	80	6	1-5/8	3 1/8	373	261	286	286	389	272
K*BP100M4S*	(2) 6FE-50	100	6	1-5/8	3 1/8	373	261	286	286	389	272
K*BP044L4S*	(2) 4GE-23	44	4	1-1/8	3 1/8	200	133	146	146	209	139
K*BP054L4S*	(2) 6HE-28	54	4	1-1/8	3 1/8	261	200	219	219	272	209
K*BP060L4S*	(2) 6GE-34	60	4	1-1/8	3 1/8	261	200	219	219	272	209
K*BP080L4S*	(2) 6FE-44	80	4	1-1/8	3 1/8	373	261	286	286	389	272

* Each asterisk represents a variable character based upon model and voltage ordered. See page 2 for nomenclature.
^ Connection size with or without factory installed liquid and/or suction line assembly.

NOMINAL COMPRESSOR HP		
SINGLE COMPRESSOR	DUAL PIPING	PARALLEL PIPING
15 HP	30 (2) 15 HP	–
20 HP	40 (2) 20 HP	–
22 HP	44 (2) 22 HP	44 (2) 22 HP
25 HP	50 (2) 25 HP	50 (2) 25 HP
27 HP	54 (2) 27 HP	54 (2) 27 HP
30 HP	60 (2) 30 HP	60 (2) 30 HP
35 HP	70 (2) 35 HP	70 (2) 35 HP
40 HP	80 (2) 40 HP	80 (2) 40 HP
50 HP	100 (2) 50 HP	100 (2) 50 HP

Specifications - All Models Cont.

MODEL DATA		FANS LONG	DIMENSIONS (IN.)			APPROX. SHIP WT. (LBS.)	SOUND DATA dBA†
MODEL NUMBER	COMP. MODEL		H	W	L		
Single Compressor Models							
K*BV015M4S*	4NE-20	2	58-1/8	45-3/8	159-1/4	1,827	71.9
K*BV020M4S*	4JE-22	2	58-1/8	45-3/8	159-1/4	1,909	71.9
K*BV025M4S*	4HE-25	2	58-1/8	45-3/8	159-1/4	1,938	71.9
K*BV030M4S*	4GE-30	2	58-1/8	45-3/8	159-1/4	1,944	71.9
K*BV035M4S*	6HE-35	3	58-1/8	45-3/8	207-1/4	2,408	74.9
K*BV040M4S*	6GE-40	3	58-1/8	45-3/8	207-1/4	2,415	74.9
K*BV050M4S*	6FE-50	3	58-1/8	45-3/8	207-1/4	2,421	74.9
K*BV022L4S*	4GE-23	2	58-1/8	45-3/8	159-1/4	1,913	71.9
K*BV027L4S*	6HE-28	2	58-1/8	45-3/8	159-1/4	1,984	71.9
K*BV030L4S*	6GE-34	2	58-1/8	45-3/8	159-1/4	1,993	71.9
K*BV040L4S*	6FE-44	2	58-1/8	45-3/8	159-1/4	2,017	71.9
Dual Compressor Models							
K*BD030M4S*	(2) 4NE-20	2	58-1/8	90-7/8	159-1/4	3,560	78.4
K*BD040M4S*	(2) 4JE-22	2	58-1/8	90-7/8	159-1/4	3,720	78.4
K*BD050M4S*	(2) 4HE-25	2	58-1/8	90-7/8	159-1/4	3,780	78.4
K*BD060M4S*	(2) 4GE-30	2	58-1/8	90-7/8	159-1/4	3,790	78.4
K*BD070M4S*	(2) 6HE-35	3	58-1/8	90-7/8	207-1/4	4,700	80.2
K*BD080M4S*	(2) 6GE-40	3	58-1/8	90-7/8	207-1/4	4,710	80.2
K*BD100M4S*	(2) 6FE-50	3	58-1/8	90-7/8	207-1/4	4,720	80.2
K*BD044L4S*	(2) 4GE-23	2	58-1/8	90-7/8	159-1/4	3,730	78.4
K*BD054L4S*	(2) 6HE-28	2	58-1/8	90-7/8	159-1/4	3,870	78.4
K*BD060L4S*	(2) 6GE-34	2	58-1/8	90-7/8	159-1/4	3,890	78.4
K*BD080L4S*	(2) 6FE-44	2	58-1/8	90-7/8	159-1/4	3,930	78.4
Parallel Compressor Models							
K*BP050M4S*	(2) 4HE-25	2	58-1/8	90-7/8	159-1/4	3,720	78.4
K*BP060M4S*	(2) 4GE-30	2	58-1/8	90-7/8	159-1/4	3,730	78.4
K*BP070M4S*	(2) 6HE-35	3	58-1/8	90-7/8	207-1/4	4,620	80.2
K*BP080M4S*	(2) 6GE-40	3	58-1/8	90-7/8	207-1/4	4,640	80.2
K*BP100M4S*	(2) 6FE-50	3	58-1/8	90-7/8	207-1/4	4,650	80.2
K*BP044L4S*	(2) 4GE-23	2	58-1/8	90-7/8	159-1/4	3,670	78.4
K*BP054L4S*	(2) 6HE-28	2	58-1/8	90-7/8	159-1/4	3,810	78.4
K*BP060L4S*	(2) 6GE-34	2	58-1/8	90-7/8	159-1/4	3,830	78.4
K*BP080L4S*	(2) 6FE-44	2	58-1/8	90-7/8	159-1/4	3,870	78.4

Department of Energy Annual Walk-In Energy Factor (AWEF) Ratings^	
Base Model Number	AWEF
Medium Temperature Models[1]	
K*BV015M4S*	7.6
K*BV020M4S*	7.6
K*BV025M4S*	7.6
K*BV030M4S*	7.6
K*BV035M4S*	7.6
K*BV040M4S*	7.6
K*BV050M4S*	7.6
Low Temperature Models[2]	
K*BV022L4S*	3.15
K*BV027L4S*	3.15
R*BV030L4S*	3.15

* Each asterisk represents a variable character based upon model and voltage ordered. See page 2 for nomenclature.

† Estimated dBA values at 10 feet from the unit. Correction factors: Deduct 6 dBA for 20 to 40 feet, 12 dBA @ 40 to 60 feet. Ratings at the outlet of the discharge air. The actual measurements may vary depending upon installation variables. Environmental factors may have a significant influence on this data.

See page 27 for dimensional drawings.

^ Larger HP Single QV-series and Parallel Compressor models are not intended for use in walk-in coolers and freezers less than 3,000 sq. feet thus are outside of the scope of this DOE regulation. Dual Compressor models serve more than one refrigerated load thus are outside (exempt) of the scope of this DOE regulation.

1. If the medium temperature model has a numerical value in the table above, the following statement applies: "This refrigeration system is designed and certified for use in walk-in cooler applications."
2. If the low temperature model has a numerical value in the table above, the following statement applies: "This refrigeration system is designed and certified for use in walk-in freezer applications."

Dimensional Drawings

SINGLE COMPRESSOR WIDTH

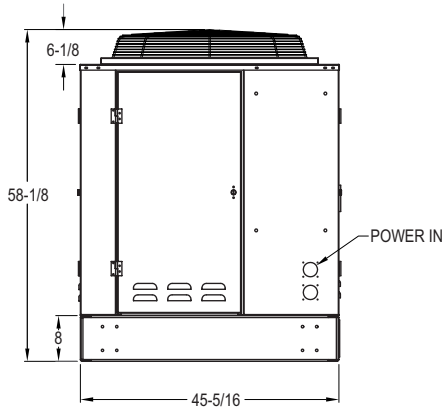

DUAL/PARALLEL COMPRESSOR WIDTH

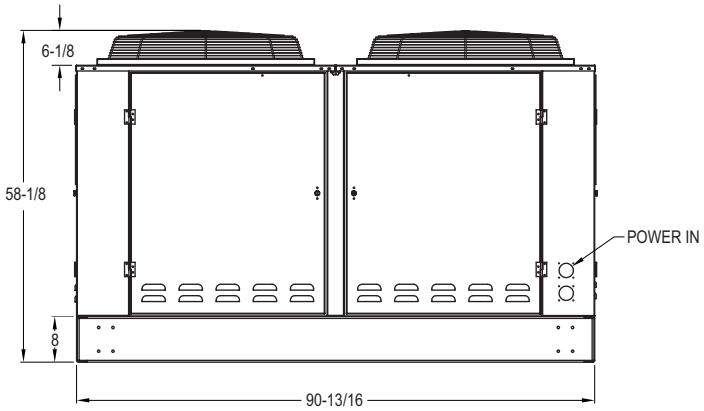

2 FAN

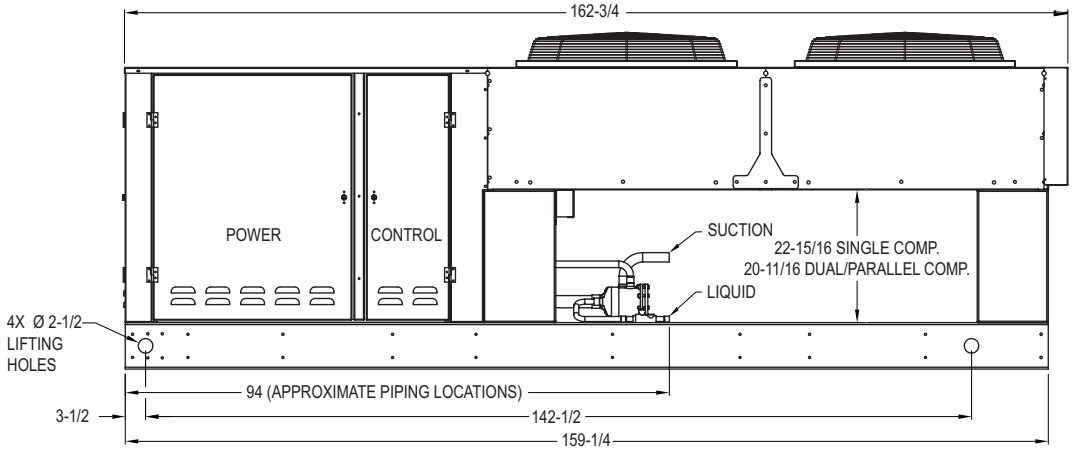

3 FAN

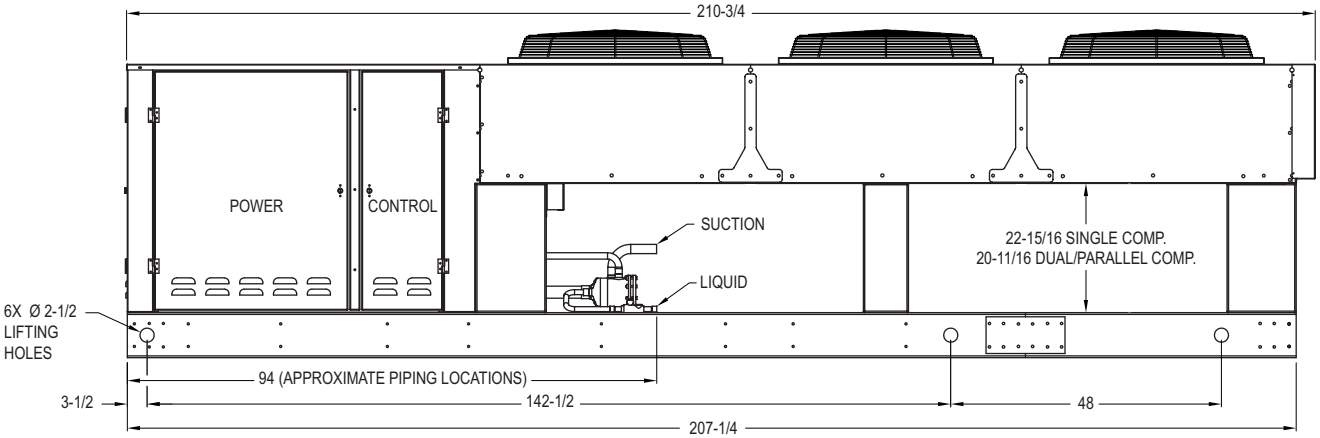

Notes:

- All dimensions are in inches.
- Utilize all lifting points during installation.
- Refrigerant connections located on each side for Dual models.

Due to continuing product development, specifications are subject to change without notice.

KRAMER

201 Thomas French Drive, Scottsboro, AL 35769 • PHONE (256) 259-7400 • FAX (256) 259-7478 • **kramer.htpg.com**
E-mail or call us for help: **parts@htpg.com** or **1-855-HTPARTS (1-855-487-2787)**